User Manual

H1(G2)/AC1(G2) SERIES

In order to prevent improper operation before use, please carefully read this manual.

Table of Contents

1. Notes on This Manual 1
    1.1 Scope of Validity 1
    1.2 Target Group 1
    1.3 Symbols Used 1
2. Safety 2
    2.1 Appropriate Usage 2
    2.2 PE Connection and Leakage Current 3
    2.3 Surge Protection Devices (SPDs) for PV Installation 4
3. Introduction 4
    3.1 Basic Features 4
    3.2 Dimensions 5
    3.3 Terminals of Inverter 6
4. Technical Data 7
    4.1 PV Input (For Hybrid Only) 7
    4.2 Battery 8
    4.3 AC Output/Input 9
    4.4 EPS Output 10
    4.5 Efficiency, Safety and Protection 11
    4.6 General Data 12
5. Installation 13
    5.1 Check for Physical Damage 13
    5.2 Packing List 13
    5.3 Mounting 14
6. Electrical Connection 16
    6.1 PV Connection (For Hybrid Only) 16
    6.2 Battery Connection 18
    6.3 AC Connection 19
    6.4 Earth Connection 23
    6.5 Communication Device Installation (Optional) 23
    6.6 EPS Connection 39
    6.7 System Connection Diagrams 42
    6.8 Inverter Start-Up 43
    6.9 Inverter Switch Off 43
7. Firmware Upgrading 44
8. Operation 45
    8.1 Control Panel 45
    8.2 Function Tree 46
9. Maintenance 46
    9.1 Alarm List 46
    9.2 Troubleshooting and Routine Maintenance 52
10. Decommissioning 53
    10.1 Dismantling the Inverter 53
    10.2 Packaging 53
    10.3 Storage and Transportation 53

1. Notes on This Manual

1.1 Scope of Validity

This manual describes the assembly, installation, commissioning, maintenance and troubleshooting of the following model(s) of Fox ESS products:

H1-3.0-E-G2 H1-3.7-E-G2 H1-4.6-E-G2 H1-5.0-E-G2 H1-6.0-E-G2
H1-4.6-E1-G2 H1-5.0-E1-G2
AC1-3.0-E-G2 AC1-3.7-E-G2 AC1-4.6-E-G2 AC1-5.0-E-G2 AC1-6.0-E-G2
AC1-4.6-E1-G2 AC1-5.0-E1-G2

Note: Please keep this manual where it will be accessible at all times.

1.2 Target Group

This manual is for qualified electricians. The tasks described in this manual only can be performed by qualified electricians.

1.3 Symbols Used

The following types of safety instructions and general information appear in this document as described below:

	Danger! “Danger” indicates a hazardous situation which, if not avoided, will result in death or serious injury.
	Warning! “Warning” indicates a hazardous situation which, if not avoided, could result in death or serious injury.
	Caution! “Caution” indicates a hazardous situation which, if not avoided, could result in minor or moderate injury.
	Note! “Note” provides important tips and guidance.

This section explains the symbols shown on the inverter and on the type label:

Symbols	Explanation
	Symbol Explanation CE mark. The inverter complies with the requirements of the applicable CE guidelines.
	Beware of hot surface. The inverter can become hot during operation. Avoid contact during operation.
	Danger of high voltages. Danger to life due to high voltages in the inverter!
	Danger. Risk of electric shock!

	Danger to life due to high voltage. There is residual voltage in the inverter which needs 5 min to discharge. Wait 5 min before you open the upper lid or the DC lid.
	Read the manual.
	Product should not be disposed as household waste.
	PE conductor terminal.

2. Safety

2.1 Appropriate Usage

H1(G2)/AC1(G2) series inverters are designed and tested in accordance with international safety requirements. However, certain safety precautions must be taken when installing and operating this inverter. The installer must read and follow all instructions, cautions and warnings in this installation manual.

- All operations including transport, installation, start-up and maintenance, must be carried out by qualified, trained personnel.
- The electrical installation & maintenance of the inverter shall be conducted by a licensed electrician and shall comply with local wiring rules and regulations.
- Before installation, check the unit to ensure it is free of any transport or handling damage, which could affect insulation integrity or safety clearances. Choose the installation location carefully and adhere to specified cooling requirements. Unauthorized removal of necessary protections, improper use, incorrect installation and operation may lead to serious safety and shock hazards or equipment damage.
- Before connecting the inverter to the power distribution grid, contact the local power distribution grid company to get appropriate approvals. This connection must be made only by qualified technical personnel.
- Do not install the equipment in adverse environmental conditions such as in close proximity to flammable or explosive substances; in a corrosive or desert environment; where there is exposure to extreme high or low temperatures; or where humidity is high.
- Do not use the equipment when the safety devices do not work or are disabled.
- Use personal protective equipment, including gloves and eye protection during the installation.
- Inform the manufacturer about non-standard installation conditions.
- Do not use the equipment if any operating anomalies are found. Avoid temporary repairs.
- All repairs should be carried out using only approved spare parts, which must be installed in accordance with their intended use and by a licensed contractor or authorized Fox ESS service representative.
- Liabilities arising from commercial components are delegated to their respective manufacturers.
- Any time the inverter has been disconnected from the public network, please be extremely

cautious as some components can retain charge sufficient to create a shock hazard. Prior to touching any part of the inverter please ensure surfaces and equipment are under touch safe temperatures and voltage potentials before proceeding.

2.2 PE Connection and Leakage Current

PV System Residual Current Factors

- In every PV installation, several elements contribute to the current leakage to protective earth (PE). these elements can be divided into two main types.
- Capacitive discharge current - Discharge current is generated mainly by the parasitic capacitance of the PV modules to PE. The module type, the environmental conditions (rain, humidity) and even the distance of the modules from the roof can effect the discharge current. Other factors that may contribute to the parasitic capacitance are the inverter's internal capacitance to PE and external protection elements such as lighting protection.
- During operation, the DC bus is connected to the alternating current grid via the inverter. Thus, a portion of the alternating voltage amplitude arrives at the DC bus. The fluctuating voltage constantly changes the charge state of the parasitic PV capacitor (i.e capacitance to PE). This is associated with a displacement current, which is proportional to the capacitance and the applied voltage amplitude.
- Residual current - if there is a fault, such as defective insulation, where an energized cable comes into contact with a grounded person, an additional current flows, known as a residual current.

Residual Current Device (RCD)

- All Fox ESS inverters incorporate a certified internal RCD (Residual Current Device) to protect against possible electrocution in case of a malfunction of the PV array, cables or inverter (DC). The RCD in the Fox ESS inverter can detect leakage on the DC side. There are 2 trip thresholds for the RCD as required by the DIN VDE 0126-1-1 standard. A low threshold is used to protect against rapid changes in leakage typical of direct contact by people. A higher threshold is used for slowly rising leakage currents, to limit the current in grounding conductors for the safety. The default value for higher speed personal protection is 30mA, and 300mA per unit for lower speed fire safety.

Installation and Selection of an External RCD device

- An external RCD is required in some countries. The installer must check which type of RCD is required by the specific local electric codes. Installation of an RCD must always be conducted in accordance with local codes and standards. Fox ESS recommends the use of a type-A RCD. Unless a lower value is required by the specific local electric codes, Fox ESS suggests an RCD value between 100mA and 300mA.
- In installations where the local electric code requires an RCD with a lower leakage setting, the discharge current might result in nuisance tripping of the external RCD. The following steps are recommended to avoid nuisance tripping of the external RCD:

1. Selecting the appropriate RCD is important for correct operation of the installation. An RCD with a rating of 30mA may actually trip at a leakage as 15mA (according to IEC 61008). High quality RCDs will typically trip at a value closer to their rating.
2. Configure the trip current of the inverter' internal RCD to a lower value than the trip current of the external RCD. The internal RCD will trip if the current is higher than the allowed current, but because the internal inverter RCD automatically resets when the residual currents are low it saves the manual reset.

2.3 Surge Protection Devices (SPDs) for PV Installation

WARNING!

Over-voltage protection with surge arresters should be provided when the PV power system is installed. The grid connected inverter is not fitted with SPDs in both PV input side and mains side. Lightning will cause damage either from a direct strike or from surges due to a nearby strike.

Induced surges are the most likely cause of lightning damage in majority or installations, especially in rural areas where electricity is usually provided by long overhead lines. Surges may impact on both the PV array conduction and the AC cables leading to the building. Specialists in lightning protection should be consulted during the end use application. Using appropriate external lightning protection, the effect of a direct lightning strike into a building can be mitigated in a controlled way, and the lightning current can be discharged into the ground.

Installation of SPDs to protect the inverter against mechanical damage and excessive stress include a surge arrester in case of a building with external lightning protection system (LPS) when separation distance is kept. To protect the DC system, surge suppression device (SPD type2) should be fitted at the inverter end of the DC cabling and at the array located between the inverter and the PV generator, if the voltage protection level (VP) of the surge arresters is greater than 1100V, an additional SPD type 3 is required for surge protection for electrical devices.

To protect the AC system, surge suppression devices (SPD type2) should be fitted at the main incoming point of AC supply (at the consumer's cutout), located between the inverter and the meter/distribution system; SPD (test impulse D1) for signal line according to EN 61632-1. All DC cables should be installed to provide as short a run as possible, and positive and negative cables of the string or main DC supply should be bundled together.

Avoiding the creation of loops in the system. This requirement for short runs and bundling includes any associated earth bundling conductors. Spark gap devices are not suitable to be used in DC circuits once conducting; they won't stop conducting until the voltage across their terminals is typically below 30 volts.

3. Introduction

3.1 Basic Features

H1(G2)/AC1(G2) series is high-quality inverters which can convert solar energy to AC energy and store energy into battery. The inverter can be used to optimize self-consumption, store in the battery for future use or feed-in to public grid. Work mode depends on PV energy and user's preference.

- System advantages:
  - Advanced DSP control technology.
  - Utilizes the latest high-efficiency power component.
  - Advanced anti-islanding solutions.
  - IP65 protection level.
  - Max. Efficiency up to 97.8%. EU efficiency up to 97.0%. THD<3%.
  - Safety & Reliability: Transformerless design with software and hardware protection.
  - Export limitation (CT/Meter/DRM0/ESTOP).
  - Power factor regulation. Friendly HMI.

- LED status indications.
- LCD display technical data, human-machine interaction through four touch keys.
- PC remote control.

- Work modes:

Work modes	Description
Self-use (with PV Power)	Priority: load>battery>grid The energy produced by the PV system is used to optimize self-consumption. The excess energy is used to charge the batteries, then exported to gird.
Self-use (without PV Power)	When no PV supplied, battery will discharge for local loads firstly, and grid will supply power when the battery capacity is not enough.
Feed in priority	Priority: load>grid>battery In the case of the external generator, the power generated will be used to supply the local loads firstly, then export to the public grid. The redundant power will charge the battery.
Force time use	Priority: battery>load>grid (when charging) Priority: load>battery>grid (when discharging) This mode applies the area that has electricity price between peak and valley. User can use off-peak electricity to charge the battery. The charging and discharging time can be set flexibly, and it also allows to choose whether charge from the grid or not.
Back up mode	When the grid is off, system will supply emergency power from PV or battery to supply the home loads (Battery is necessary in EPS mode).

3.2 Dimensions

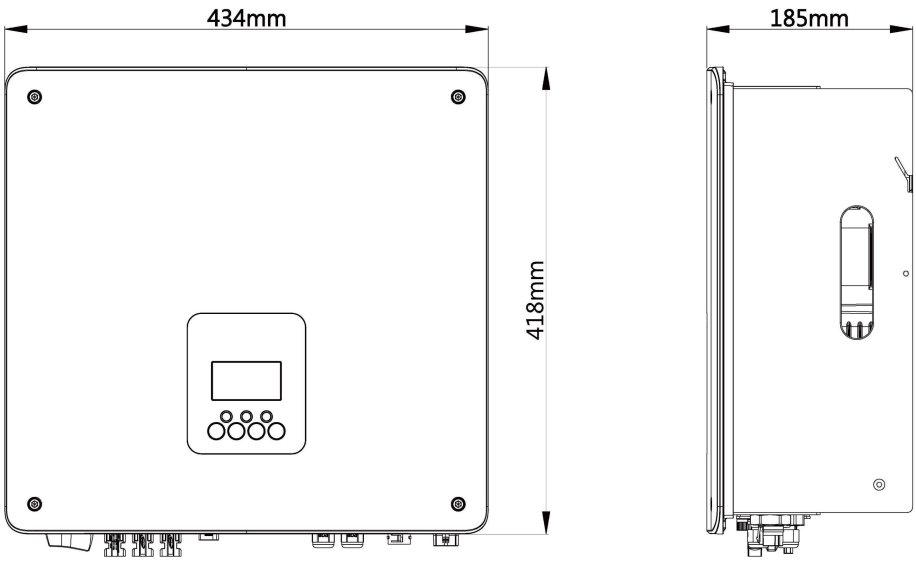

3.3 Terminals of Inverter

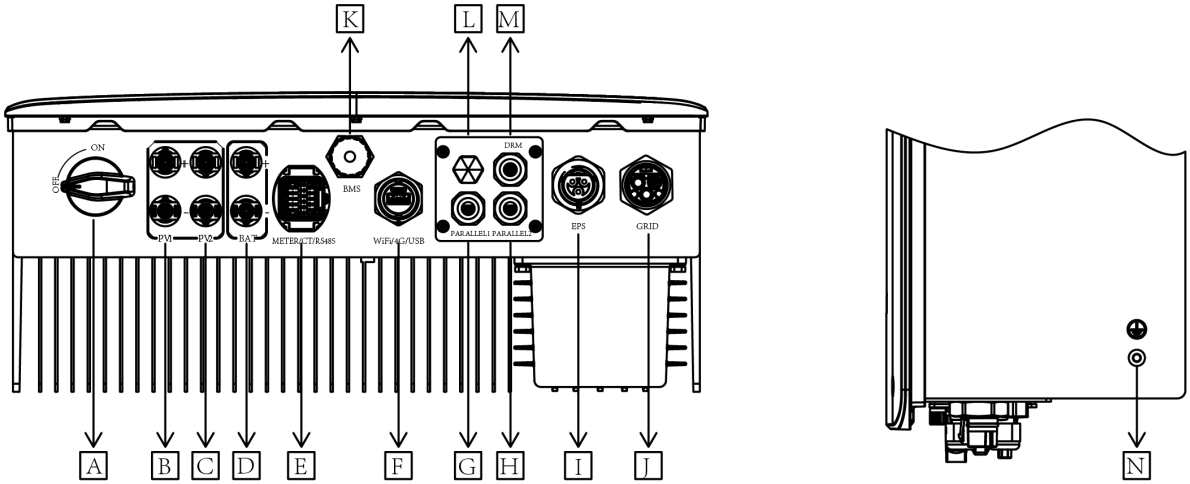

Item	Description
A	DC Switch (For Hybrid Only)
B	PV1 (For Hybrid Only)
C	PV2 (For Hybrid Only)
D	Battery Connector
E	METER/CT/RS485
F	WiFi / 4G / USB
G	PARALLEL 1
H	PARALLEL 2
I	EPS
J	GRID
K	BMS
L	Waterproof Lock Valve
M	DRM
N	Grounding Screw

Note: Only authorized personnel are permitted to set the connection.

4. Technical Data

4.1 PV Input (For Hybrid Only)

Model	H1-3.0-E-G2	H1-3.7-E-G2	H1-4.6-E-G2	H1-5.0-E-G2	H1-6.0-E-G2	H1-4.6-E1-G2	H1-5.0-E1-G2
Max. PV array power [W]	6000	7400	9200	10000	12000	9200	10000
Max. DC Input Power(PV1+PV2) [W]	6000	7400	9200	10000	12000	9200	10000
Max. MPPT input power (Per MPPT) [W]	6000	6000	6000	6000	6000	6000	6000
Max. Input Voltage [V]	600						
Start-up Input Voltage [V]	75						
Rated Input Voltage [V]	360						
MPPT Operating Voltage Range [V]	80-550						
Max. Input Current [A]	16/16						
Max. Short-circuit Current [A]	20/20						
No. of Independent MPP Trackers	2						
No. of Strings per MPP Tracker	1						

4.2 Battery

Model	H1-3.0-E-G2 AC1-3.0-E-G2	H1-3.7-E-G2 AC1-3.7-E-G2	H1-4.6-E-G2 AC1-4.6-E-G2	H1-5.0-E-G2 AC1-5.0-E-G2	H1-6.0-E-G2 AC1-6.0-E-G2	H1-4.6-E1-G2 AC1-4.6-E1-G2	H1-5.0-E1-G2 AC1-5.0-E1-G2
BATTERY							
Battery Type	Lithium battery (LFP)						
Battery Voltage [V]	80-480						
Max. Charge Current [A]	40						
Max. Discharge Current [A]	40						
Communication Interface	CAN						

4.3 AC Output/Input

Model	H1-3.0-E-G2 AC1-3.0-E-G2	H1-3.7-E-G2 AC1-3.7-E-G2	H1-4.6-E-G2 AC1-4.6-E-G2	H1-5.0-E-G2 AC1-5.0-E-G2	H1-6.0-E-G2 AC1-6.0-E-G2	H1-4.6-E1-G2 AC1-4.6-E1-G2	H1-5.0-E1-G2 AC1-5.0-E1-G2
AC OUTPUT							
Rated Output Power [W]	3000	3680	4600	5000	6000	4600	5000
Max. Output Apparent Power [VA]	3300	4048 /3680[1]	5060	5500	6600	4600	5000
Rated Grid Voltage [V]	220/230/240						
Rated Grid Frequency [Hz]	50 / 60						
Rated Output Current (per phase) [A]	13.6	16.7/16[2]	20.9	22.7	27.3	20.9	22.7
Max. Output Current [A]	15.0	18.4	23.0	25.0	30.0	20.9	22.7
Power Factor	1 (adjustable from 0.8 leading to 0.8 lagging)						
THDI	<3%@ rated power						
AC INPUT							
Max. AC Input Power [VA]	6000	7680	9200	10000	12000	9200	10000
Max. AC Input Current (per phase) [A]	27.3	34.9	41.8	45.5	54.5	41.8	45.5

Note: [1]3680 for G98, 4048 for other country

[2]16 for G98, 16.7 for other country

4.4 EPS Output

Model	H1-3.0-E-G2 AC1-3.0-E-G2	H1-3.7-E-G2 AC1-3.7-E-G2	H1-4.6-E-G2 AC1-4.6-E-G2	H1-5.0-E-G2 AC1-5.0-E-G2	H1-6.0-E-G2 AC1-6.0-E-G2	H1-4.6-E1-G2 AC1-4.6-E1-G2	H1-5.0-E1-G2 AC1-5.0-E1-G2
EPS OUTPUT (WITH BATTERY)							
Max. Output Apparent Power [VA]	3000	3680	4600	5000	6000	4600	5000
Peak Output Apparent Power (60s) [VA]	3600	4400	5500	6000	7200	5500	6000
Max. Current (per phase) [A]	13.6	16.7	20.9	22.7	27.3	20.9	22.7
Rated Output Voltage [V]	220/230/240						
Rated Output Frequency [Hz]	50/60						
THDV (linear Load)	<2%@rated power						
Parallel Operation [Pcs]	10						
Switch Time [ms]	<20						

4.5 Efficiency, Safety and Protection

Model	H1-3.0-E-G2 AC1-3.0-E-G2	H1-3.7-E-G2 AC1-3.7-E-G2	H1-4.6-E-G2 AC1-4.6-E-G2	H1-5.0-E-G2 AC1-5.0-E-G2	H1-6.0-E-G2 AC1-6.0-E-G2	H1-4.6-E1-G2 AC1-4.6-E1-G2	H1-5.0-E1-G2 AC1-5.0-E1-G2
Efficiency							
Euro Efficiency	95.26%	95.70%	96.23%	96.30%	96.33%	96.23%	96.30%
Max. Efficiency	97.01%	97.08%	97.04%	97.08%	97.08%	97.04%	97.08%
Max. Battery Charge Efficiency (PV to BAT) (@full load)	98.50%	98.50%	98.50%	98.50%	98.50%	98.50%	98.50%
Max. Battery Discharge Efficiency (BAT to AC) (@full load)	97.00%	97.00%	97.00%	97.00%	97.00%	97.00%	97.00%
Standard Compliance (more available upon request)							
Safety	EN 62109-1, EN 62109-2						
EMC	EN 61000-6-2, EN 61000-6-3						
Grid Regulation	EN50549-1, C10/11, VDE-AR-N 4105, G98, G99, CEI 0-21, NRS 097-2-1, AS/NZS 4777.2						
Protection							
Insulation Monitoring	YES						
Residual Current Monitoring	YES						
DC Reverse Polarity Protection	YES						
Anti-islanding Protection	YES						
AC Short-circuit Protection	YES						
AC Overcurrent/ Overvoltage Protection	YES						
DC Switch	YES						
Battery Wake-up	YES						

Function	
SPD	DC: Type II, /AC: Type III
AFCI	optional

4.6 General Data

Dimensions (W*H*D) [mm]	434*418*185
Weight [kg]	22
Installation	Wall-mounted
Topology	Non-isolated
Cooling Method	Nautral
Noise Emission [db]	35
Max. Operating Altitude [m]	2000
Operating Temperature Range [°C]	-25 to 60
Humidity (No Condensation)	0% to 100%
Protection Degree	IP65
Standby consumption [W]	< 15
Monitoring Module	WiFi, LAN(optional) , 4G(optional)
Communication	RS485, DRM, Ripple Control, USB, CAN
Display	LCD, App, Website
Warranty	10 years

5. Installation

5.1 Check for Physical Damage

Make sure the inverter is intact during transportation. If there is any visible damage, such as cracks, please contact your dealer immediately.

5.2 Packing List

Open the package and take out the product, please check the accessories first. The packing list shown as below.

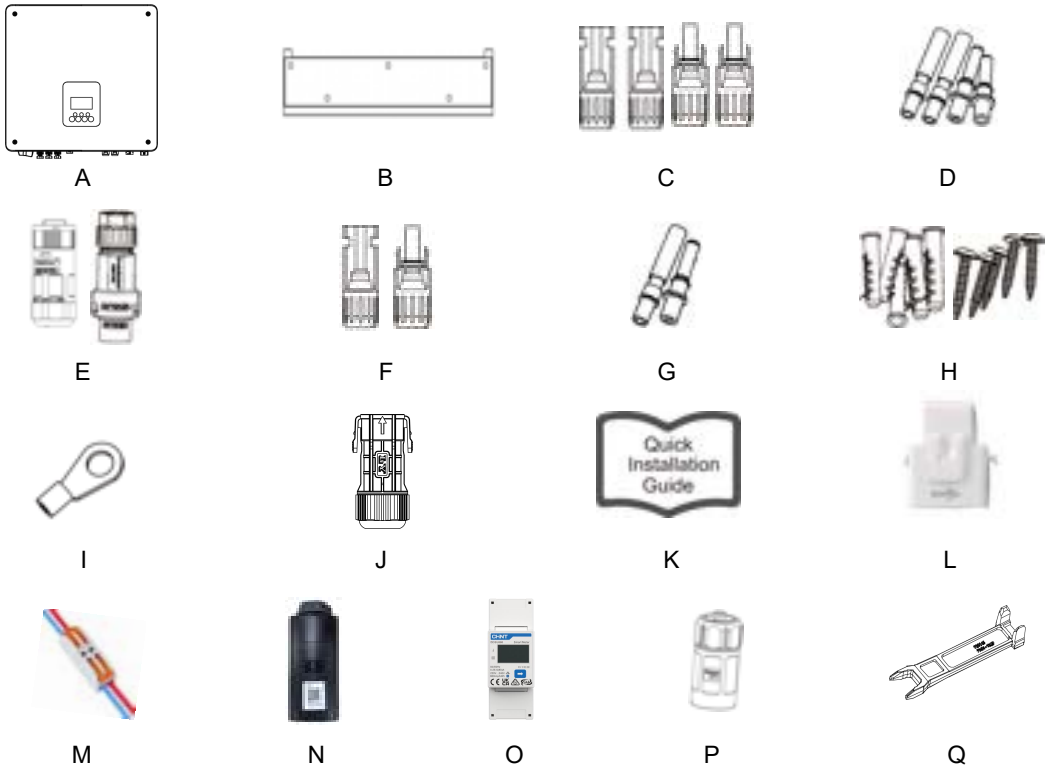

Object	Quantity	Description	Object	Quantity	Description
A	1	Inverter	J	1	Communication connector
B	1	Bracket	K	1	Quick installation guide
C	4	PV connectors (for hybrid only) (2*positive, 2*negative)	L	1	CT (with 10m cable)
D	4	PV pin contacts (for hybrid only) (2*positive, 2*negative)	M	1	CT extension connector
E	2	AC connectors (1*EPS, 1*GRID)	N	1	WiFi/LAN/4G (Optional)
F	2	Battery connectors (1*positive, 1*negative)	O	1	Meter (Optional)
G	2	Battery pin contacts (1*positive, 1*negative)	P	1	RJ45
H	5	Expansion tubes& Expansion screws	Q	1	Unlocking tool
I	1	Earth terminal			

5.3 Mounting

- Installation Precaution

Make sure the installation site meets the following conditions:

- Not in direct sunlight.
- Not in areas where highly flammable materials are stored.
- Not in potential explosive areas.
- Not in the cool air directly.
- Not near the television antenna or antenna cable.
- Not higher than altitude of about 2000m above sea level.
- Not in environment of precipitation or humidity (> 95%).
- Under good ventilation condition.
- The ambient temperature in the range of -25°C to +60°C.
- The slope of the wall should be within +5*.
- The wall hanging the inverter should meet conditions below:

1. Solid brick/concrete, or strength equivalent mounting surface;
2. Inverter must be supported or strengthened if the wall's strength isn't enough (such as wooden wall, the wall covered by thick layer of decoration).

Please avoid direct sunlight, rain exposure, snow laying up during installation and operation.

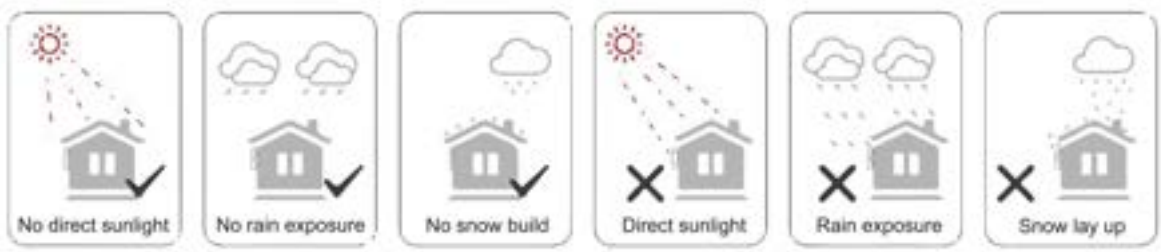

- Space Requirement

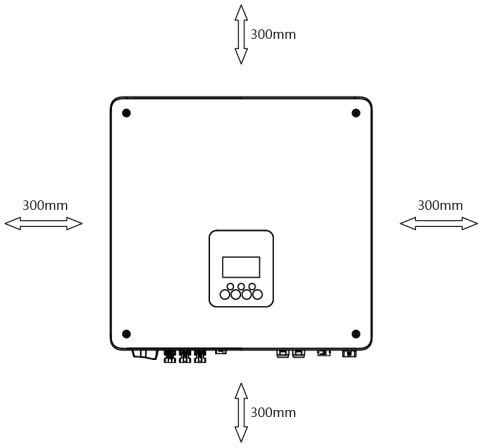

Position	Min Size
Left	300mm
Right	300mm
Top	300mm
Bottom	300mm
Front	300mm

- Mounting Steps

Tools required for installation:

- Manual wrench;
- Electric drill (drill bit set 8mm);
- Crimping pliers;
- Stripping pliers;
- Screwdriver.

Step 1: Fix the bracket on the wall

Choose the place you want to install the inverter. Place the bracket on the wall and mark the position of the 5 holes from bracket.

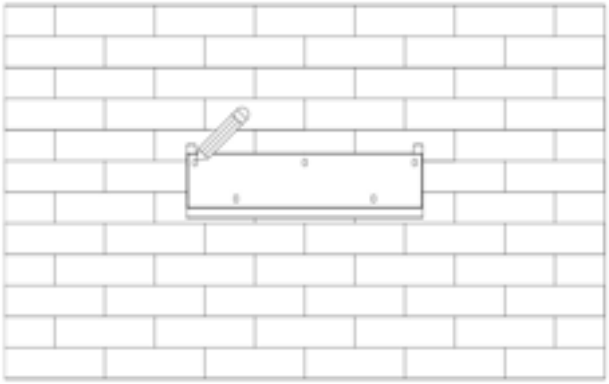

Drill holes with electric drill, make sure the holes are at least 50mm deep, and then tighten the expansion tubes.

Insert the expansion tubes into the holes and tighten them. Install the bracket with the expansion screws.

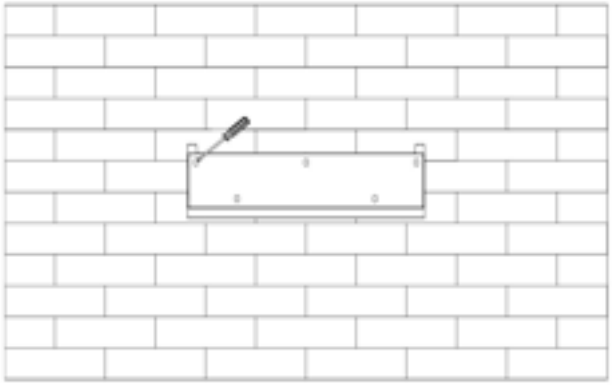

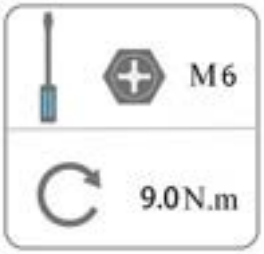

Step 2: Match the inverter with wall bracket

Hang the inverter over the bracket, slightly lower the inverter, and make sure the 2 grooves on the back are fixed with the 2 mounting bars from bracket properly. Fixing inverter with the supplied M5 screw.

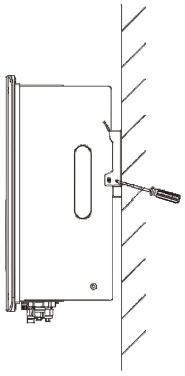

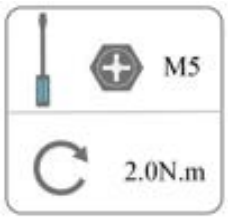

6. Electrical Connection

6.1 PV Connection (For Hybrid Only)

Step 1: PV String Connection

H1(G2) series inverters can be connected with 2-strings of PV modules. Please select suitable PV modules with high reliability and quality. Open circuit voltage of module array connected should be less than 600V, and operating voltage should be within the MPPT voltage range.

	Note! Please choose a suitable external DC switch if the inverter does not have a built-in DC switch.
	Warning! PV module voltage is very high and within a dangerous voltage range, please comply with the electric safety rules when connecting.
	Warning! Please do not make PV positive or negative to ground!

	Note! PV modules: Please ensure they are the same type, have the same output and specifications, are aligned identically, and are tilted to the same angle. In order to save cable and reduce DC loss, we recommend installing the inverter as near to the PV modules as possible.

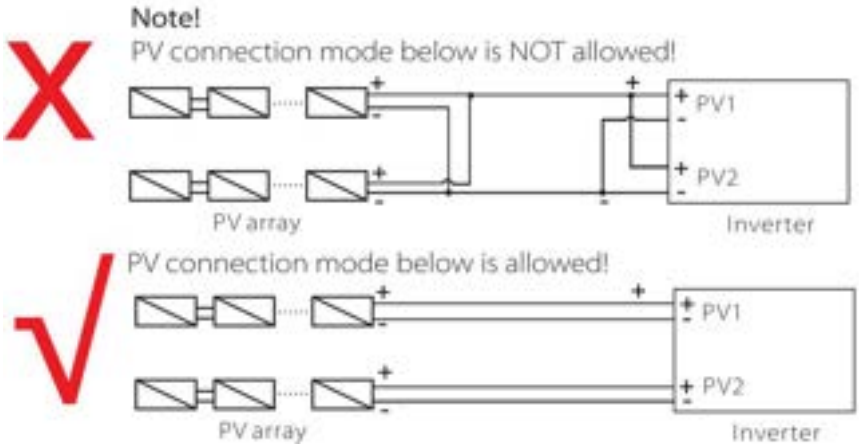

- Turn off the DC switch.
- Choose 2.5 mm² wire to connect the PV module.
- Trim 6mm of insulation from the wire end.

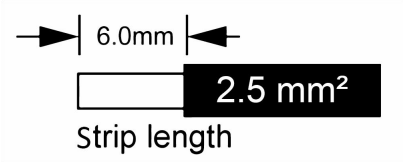

- Separate the DC connector (PV) as below.

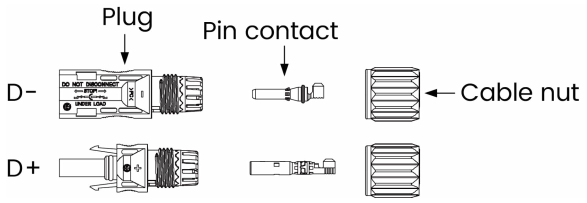

- Insert striped cable into pin contact and ensure all conductor strands are captured in the pin contact.
- Crimp pin contact by using a crimping plier. Put the pin contact with striped cable into the corresponding crimping pliers and crimp the contact.

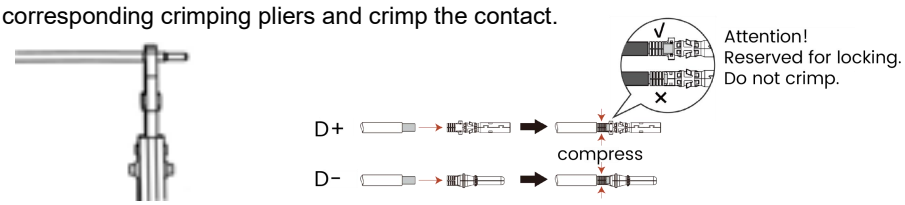

- Insert pin contact through the cable nut to assemble into back of the male or female plug. When you feel or hear a “click” the pin contact assembly is seated correctly.

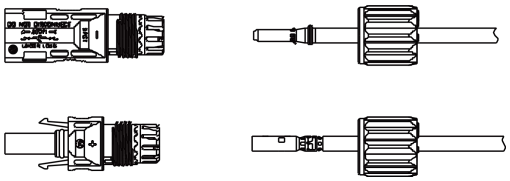

- Unlock the DC connector
  - Use the specified wrench tool.
  - When separating the DC + connector, push the tool down from the top.
  - When separating the DC - connector, push the tool down from the bottom.
  - Separate the connectors by hand.

⚠ DANGER
Make sure that the power cable connected to the inverter is connected vertically and that the vertical length is greater than 30 cm. If the cable is bent close to the terminals, it may cause poor line contact and result in burnt terminals.

6.2 Battery Connection

- Turn off the DC switch.
- Choose 6.0 mm² wire to connect the battery.
- Trim 6mm of insulation from the wire end.

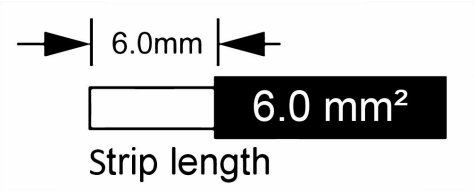

- Separate the DC connector (battery) as below.

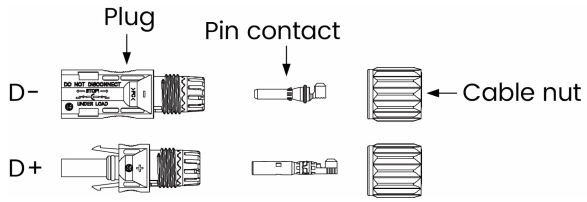

- Insert striped cable into pin contact and ensure all conductor strands are captured in the pin contact.
- Crimp pin contact by using a crimping plier. Put the pin contact with striped cable into the corresponding crimping pliers and crimp the contact.

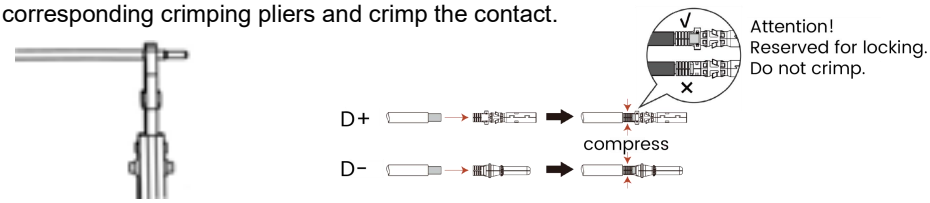

- Insert pin contact through the cable nut to assemble into back of the male or female plug. When you feel or hear a “click” the pin contact assembly is seated correctly.

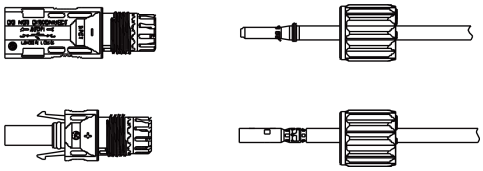

- Unlock the DC connector
  - Use the specified wrench tool.
  - When separating the DC + connector, push the tool down from the top.
  - When separating the DC - connector, push the tool down from the bottom.
  - Separate the connectors by hand.

6.3 AC Connection

Step 1: AC String Connection

H1(G2)/AC1(G2) series inverters are designed for single-phase grid. Voltage range is 220/230/240V; frequency is 50/60Hz. Other technical requests should comply with the requirement of the local public grid.

Cable dimensions

Table1: With EPS Function (internal)

Model	H1-3.0-E-G2 AC1-3.0-E-G2	H1-3.7-E-G2 AC1-3.7-E-G2	H1-4.6-E-G2 AC1-4.6-E-G2	H1-5.0-E-G2 AC1-5.0-E-G2	H1-6.0-E-G2 AC1-6.0-E-G2	H1-4.6-E1-G2 AC1-4.6-E1-G2	H1-5.0-E1-G2 AC1-5.0-E1-G2
Cable (GRID)	8.0-10.0mm²	8.0-10.0mm²	8.0-10.0mm²	8.0-10.0mm²	8.0-10.0mm²	8.0-10.0mm²	8.0-10.0mm²
Cable (EPS)	4.0mm²	4.0mm²	6.0mm²	6.0mm²	6.0mm²	6.0mm²	6.0mm²
Micro-Breaker	50A	50A	63A	63A	63A	63A	63A

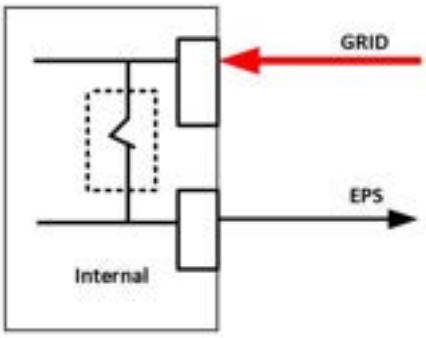

The Bypass Relay is connected in the On-Grid Connection state, and disconnected in the Off-Grid Connection state.

Note: Cable dimensions refer to Table1.

Table2: Without EPS Function (External)

Model	H1-3.0-E-G2 AC1-3.0-E-G2	H1-3.7-E-G2 AC1-3.7-E-G2	H1-4.6-E-G2 AC1-4.6-E-G2	H1-5.0-E-G2 AC1-5.0-E-G2	H1-6.0-E-G2 AC1-6.0-E-G2	H1-4.6-E1-G2 AC1-4.6-E1-G2	H1-5.0-E1-G2 AC1-5.0-E1-G2
Cable (GRID)	4.0mm²	4.0mm²	6.0mm²	6.0mm²	6.0mm²	6.0mm²	6.0mm²
Cable (EPS)	4.0mm²	4.0mm²	6.0mm²	6.0mm²	6.0mm²	6.0mm²	6.0mm²
Micro-Breaker	25A	25A	32A	32A	40A	32A	32A

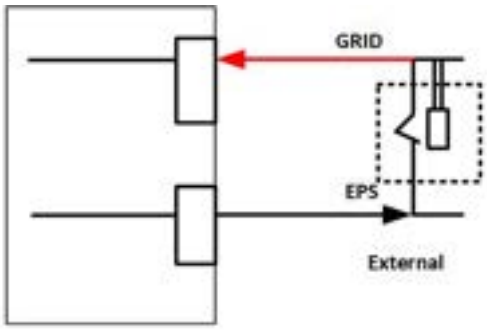

Selecting the "Normally open" relays or ATS.

The Bypass Relay is connected in the On-Grid Connection state, and disconnected in the Off-Grid Connection state.

Note: Cable dimensions refer to Table2.

Note:

1. If you don't use the EPS function, the wiring conduct core section can refer to the parameters of table 1.
2. If you use the EPS function,the wiring conduct core section can refer to the parameters of table 2.
3. A micro-breaker for max output overcurrent protection device shall be installed between inverter and grid, and the current of the protection device is referred to the table above, any load SHOULD NOT be connected with the inverter directly.

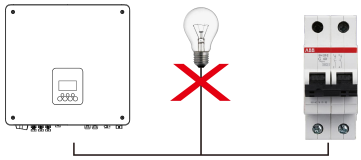

Step 2: Grid Wiring

- Check the grid voltage and compare with the permitted voltage range (refer to technical data).
- Disconnect the circuit-breaker from all the phases and secure against re-connection.
- Trim the wires:
  - Trim all the wires to 52.5mm and the PE wire to 55mm.
  - Use the crimping pliers to trim 12mm of insulation from all wire ends as below.

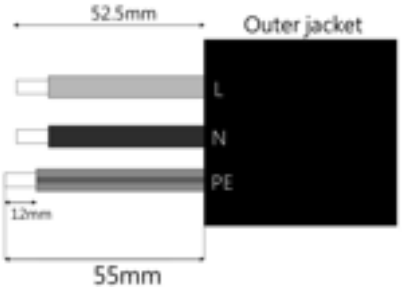

L: Brown/Red Wire

N: Blue/Black Wire

PE: Yellow & Green Wire

Note: Please refer to local cable type and color for actual installation.

A. EPS Wiring

- Run the cable into the sleeve assembly.

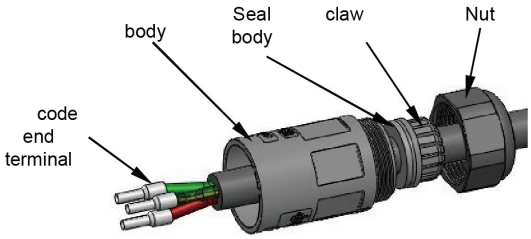

- Install the cable into the plug terminal and lock the screw, torque is (0.8 + / - 0.1 N·m).

- Insert the plastic core into the main body.

- Put the sealing body and yarn trapper into the main body, screw the lock nut into the main body, and the torque is (2.5 + / - 0.5N·m).

- Insert the male end into the female end. For the rotation direction of the lock, please refer to the LOCK mark on the assembly.

- Push the threaded sleeve to connection terminal until both are locked tightly on the inverter.

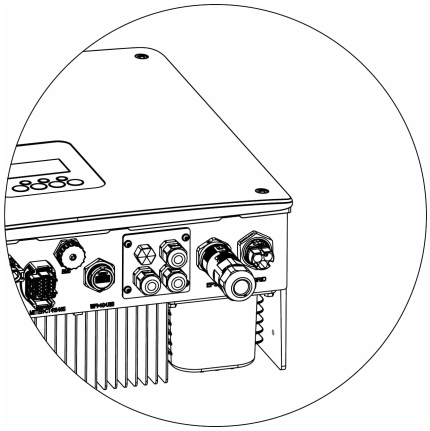

B. GRID Wiring

- Separate the ON-GRID plug into three parts as below.
  - Hold middle part of the female insert, rotate the back shell to loosen it, detach it from female inset.
  - Remove the cable nut (with rubber insert) from the back shell.

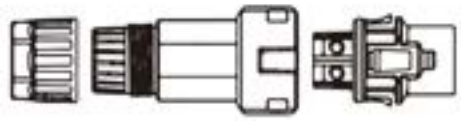

- Slide the cable nut and then the back shell onto the cable. Install the cable into the plug terminal and lock the screw, torque is (2.0+/-0.2 N.m).

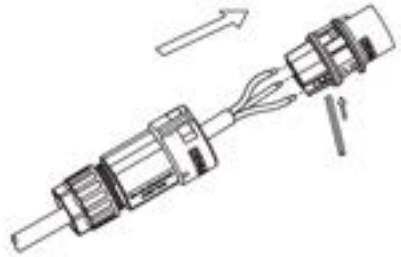

- Push the threaded sleeve into the socket, tighten up the cap on the terminal.

- Push the threaded sleeve to connection terminal until both are locked tightly on the inverter.

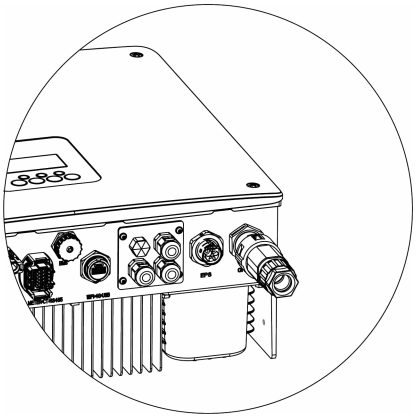

- Remove the ON-GRID connector: Press the bayonet out of the slot with a small screwdriver or the unlock tool and pull it out, or unscrew the threaded sleeve, then pull it out.

6.4 Earth Connection

Use the crimping pliers to press the ground cable into the ground terminal, screw the ground screw with screwdriver as shown below:

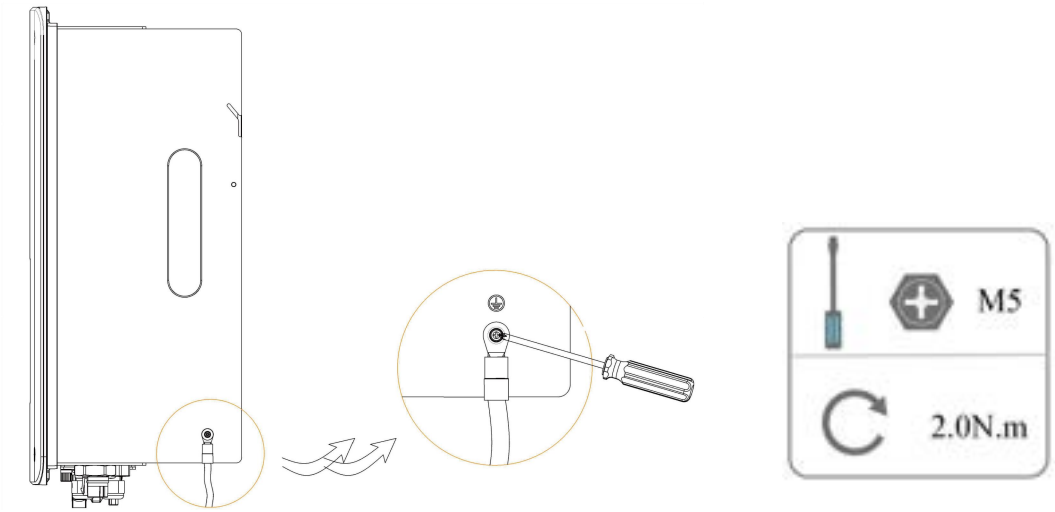

6.5 Communication Device Installation (Optional)

H1(G2)/AC1(G2) series inverters are available with multiple communication options such as WiFi, LAN, 4G, RS485 and Meter with an external device.

Operating information like output voltage, current, frequency, fault information, etc., can be monitored locally or remotely via these interfaces.

- **WiFi/LAN/4G (Optional)**

The inverter has an interface for WiFi/LAN/4G devices that allow this device to collect information from inverter; including inverter working status, performance etc., and update that information to monitoring platform (the WiFi/LAN/4G device is available to purchase from your local supplier).

Connection steps:

1. For LAN device: Please complete the wiring between router and LAN device (please refer to the LAN product manual for more details).
2. Plug the WiFi/LAN/4G device into “WiFi/LAN/4G” port at the bottom of the inverter.
3. For WiFi device: Connect the WiFi with the local router, and complete the WiFi configuration (please refer to the WiFi product manual for more details).
4. Set-up the site account on the Fox ESS monitoring platform (please refer to the monitoring user manual for more details).

- **Meter/CT/RS485**

The inverter has integrated export limitation functionality. To use this function, a power meter or a CT must be installed. The PIN definitions of Meter/CT/485 interface are as below.

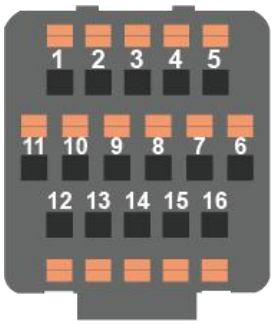

PIN	1	2	3	4	5	6	7	8
Definition	Meter485A	Meter485B	EMS 485B	EMS 485A	CT2+	CT2-	CT1-	CT1+

PIN	9	10	11	12	13	14	15	16
Definition	/	K1	K2	K3	K4	/	DI	COM

Note:

- CT1: For Hybrid/AC.
  CT2: Grid tied inverter (if have).
- Compatible Meter type: DDSU666 (CHINT), SDM230 (EASTRON).

- CT

This inverter has an integrated export management function. To enable this function, a power meter or CT must be installed. The CT should be clamped on the main live line of the grid side. The arrow on the CT should be pointing towards the grid. The white cable connects to CT+, and the black cable connects to CT-.

Meter/CT setting:

Short press the touch key to switch display or make the number+1. Long press the touch key to confirm your setting.

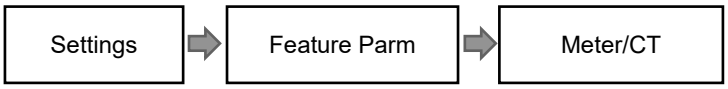

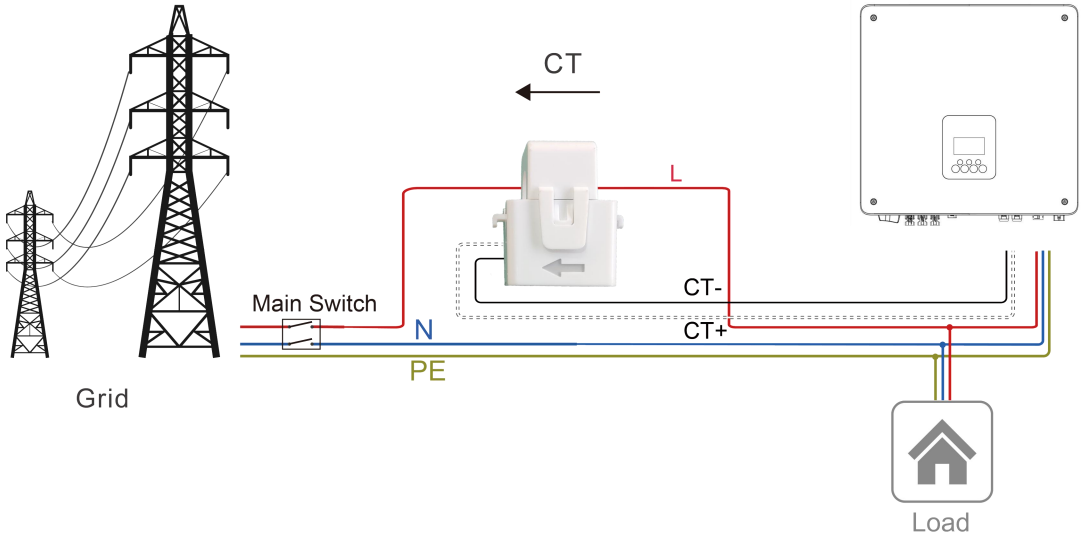

If there is another generator in the home, CT2 can be used to record the power generated by the generator and transmit the data to the website for monitoring.

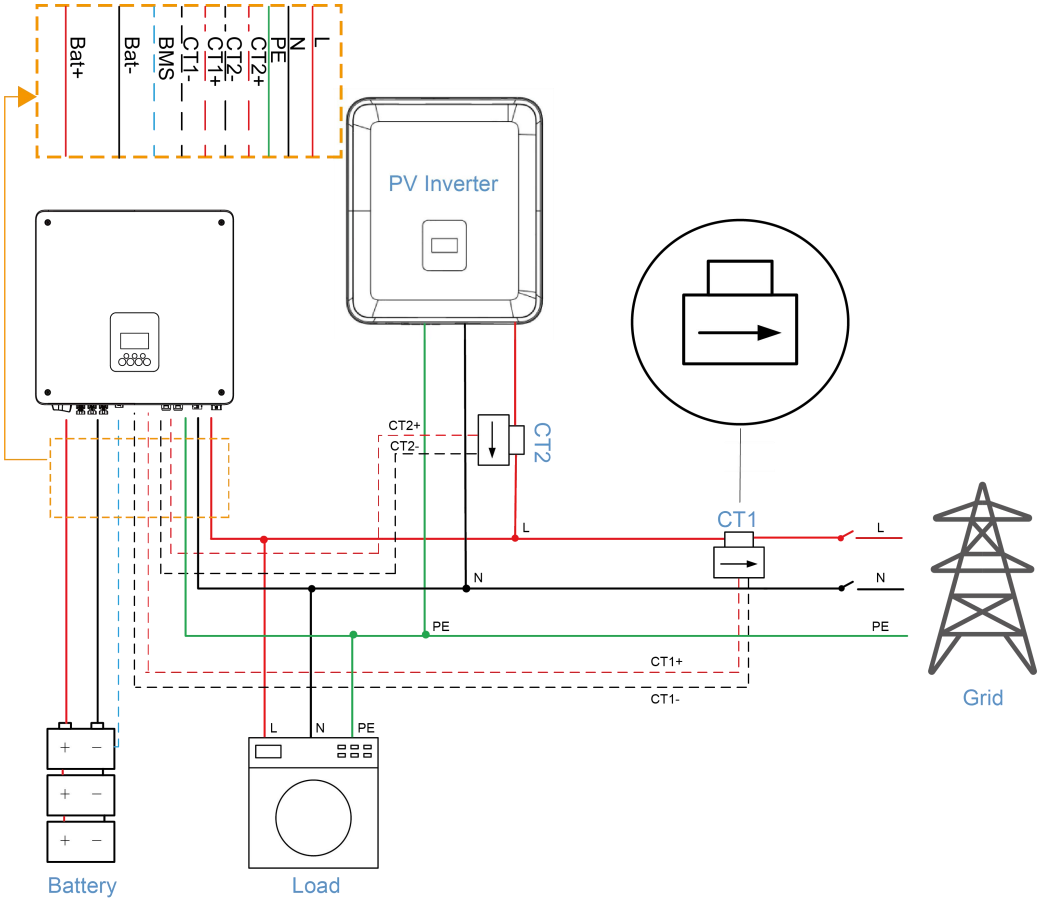

Wiring diagram for solution Meter1+CT2:

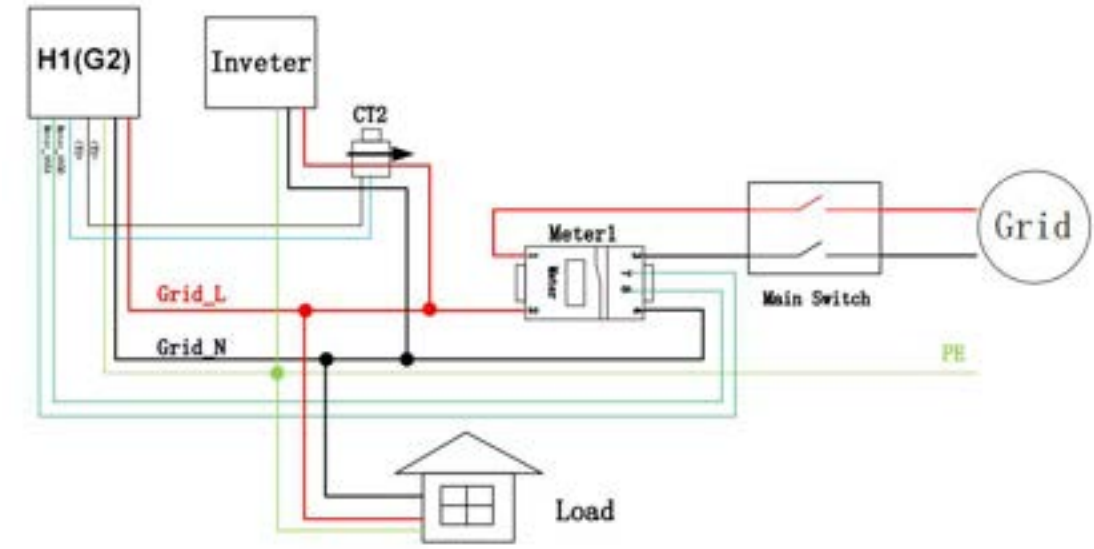

Caution: Please do the wiring strictly according to the diagram below, do not exchange Meter1 and Meter2 location in following dual-meter wiring solution, or may lead to unpredictable malfunction in data-recording. You can discern Meter1 or Meter2 from the package of the Meter. Default Modbus address for Meter1 is 1, default Modbus address for Meter2 is 2.

Wiring diagram for solution Meter+ 6CTs:

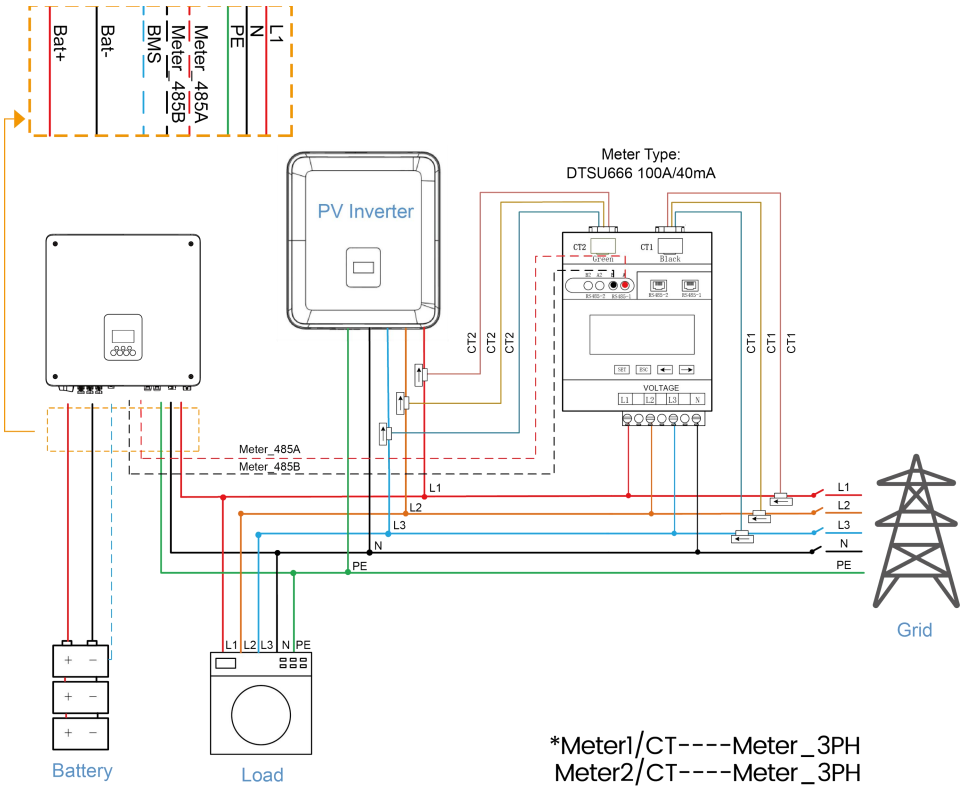

Wiring diagram for solution Meter1+Meter2(single phase):

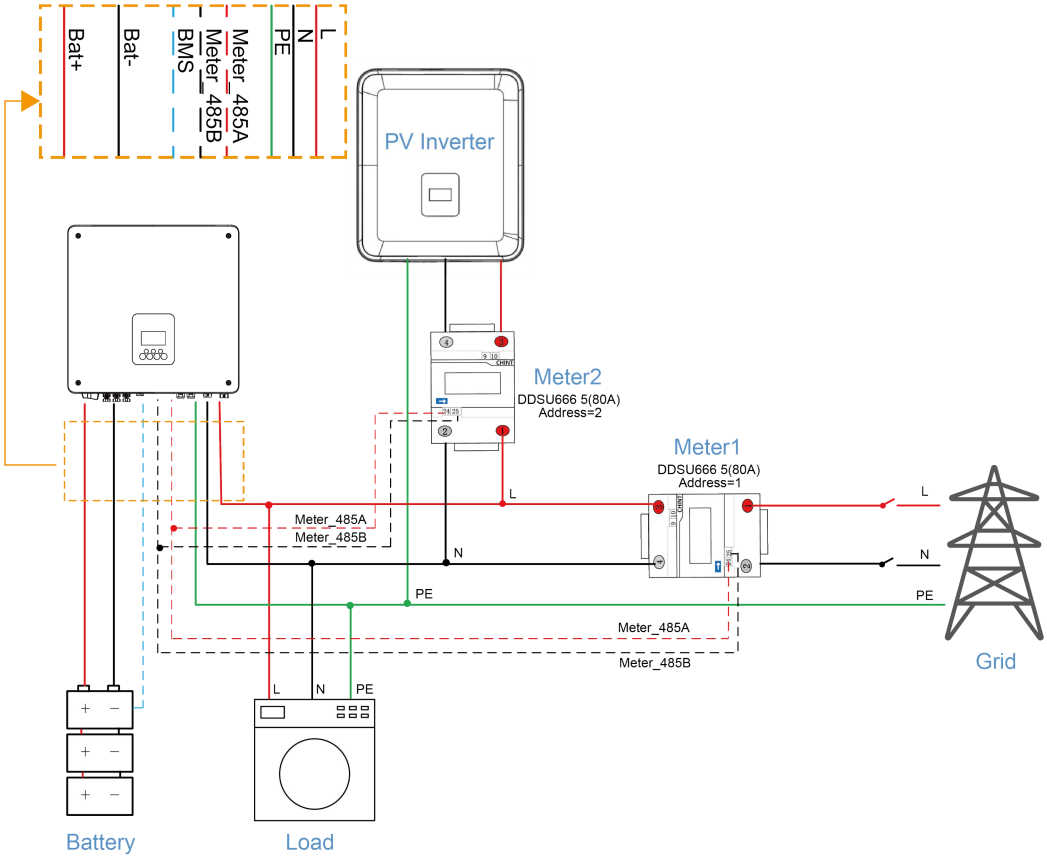

Wiring diagram for solution Meter1+Meter2(three phase):

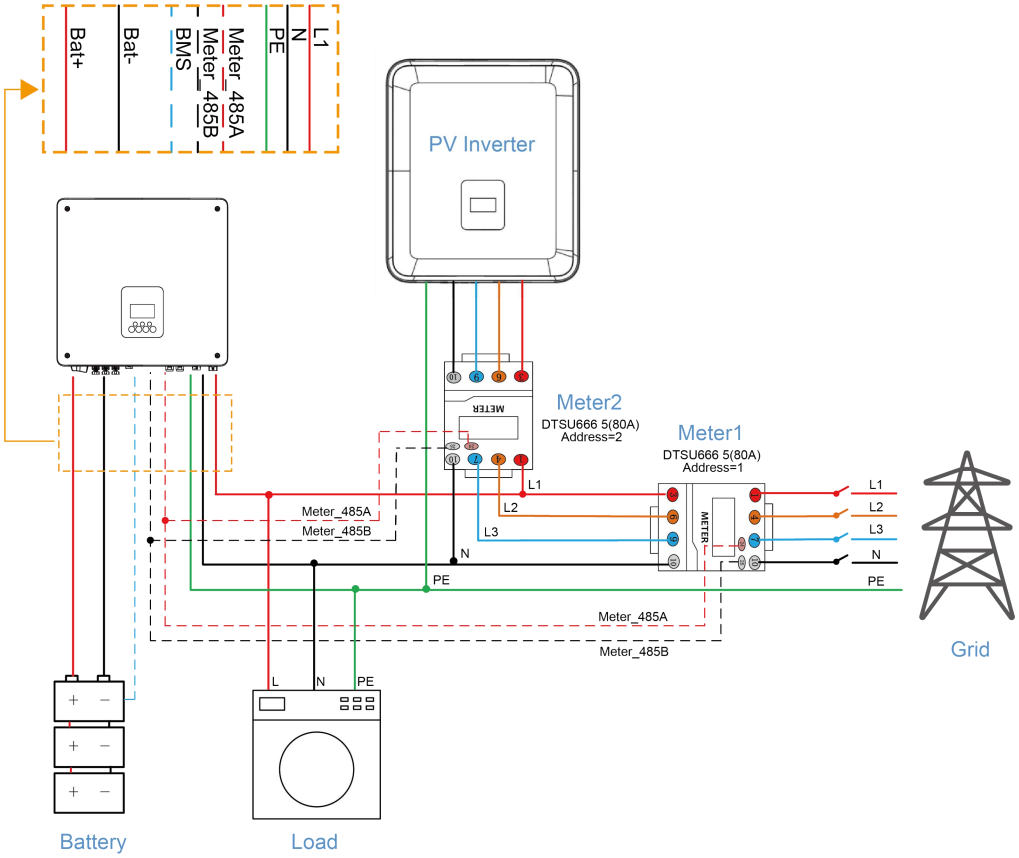

	Note! For a precise reading and control of power, a meter can be used instead of a CT. If the CT is fitted in the wrong orientation, anti-backflow function will fail.

- RS485

RS485 is a standard communication interface which can transmit the real time data from inverter to PC or other monitoring devices.

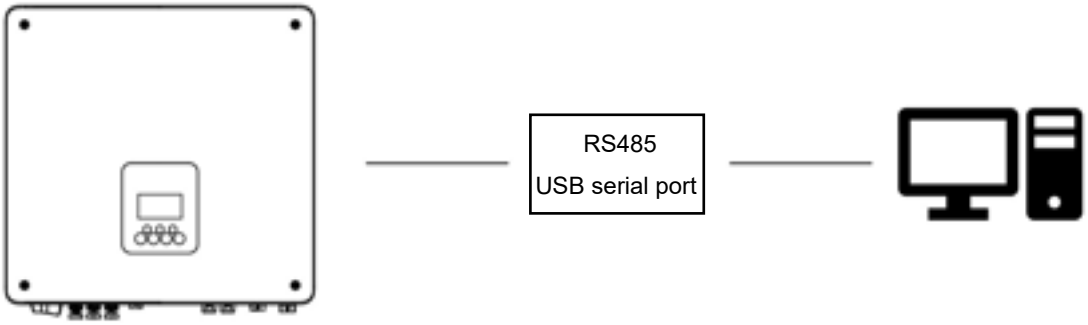

- Meter (optional)

The inverter has integrated export limitation functionality. To use this function, a power meter or a CT must be installed. For Meter installation, please install it on the grid side.

Meter model	Factory	Current	Frequency
SDM230-Modbus	EASTRON	0.5%	0.2%
DDSU666	CHINT	1%	1%

CT model	Factory	Ratio
CTSA016	YUANXING	100A/33.33mA
EICT-120K-T1000C	ELECMAT	120A/40mA

Export limitation setting:

Settings → On-Grid Parm → Export Control → xxxxxW

The electricity meter is connected as follows:

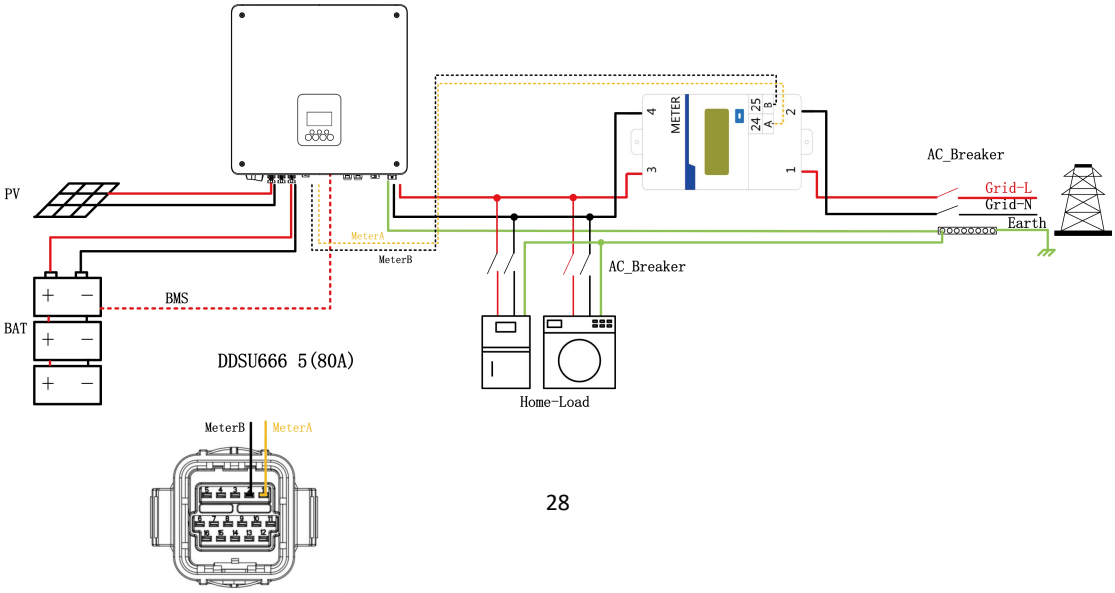

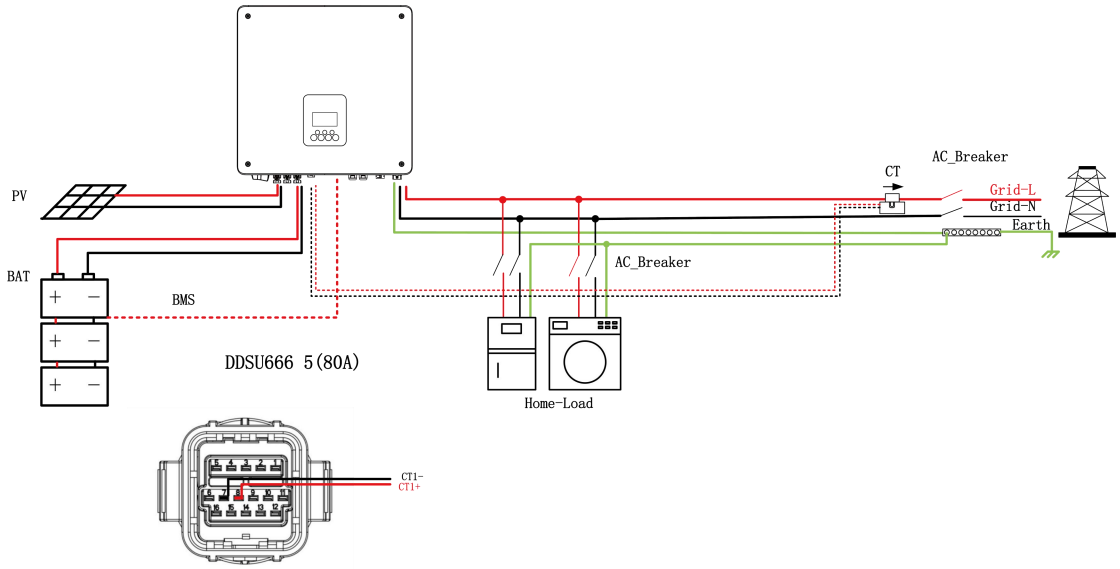
PV
BAT
BMS
DDSU666 5(80A)
CT
AC_Breaker
Grid-L
Grid-N
Earth
AC_Breaker
Home-Load
CT1-
CT1+

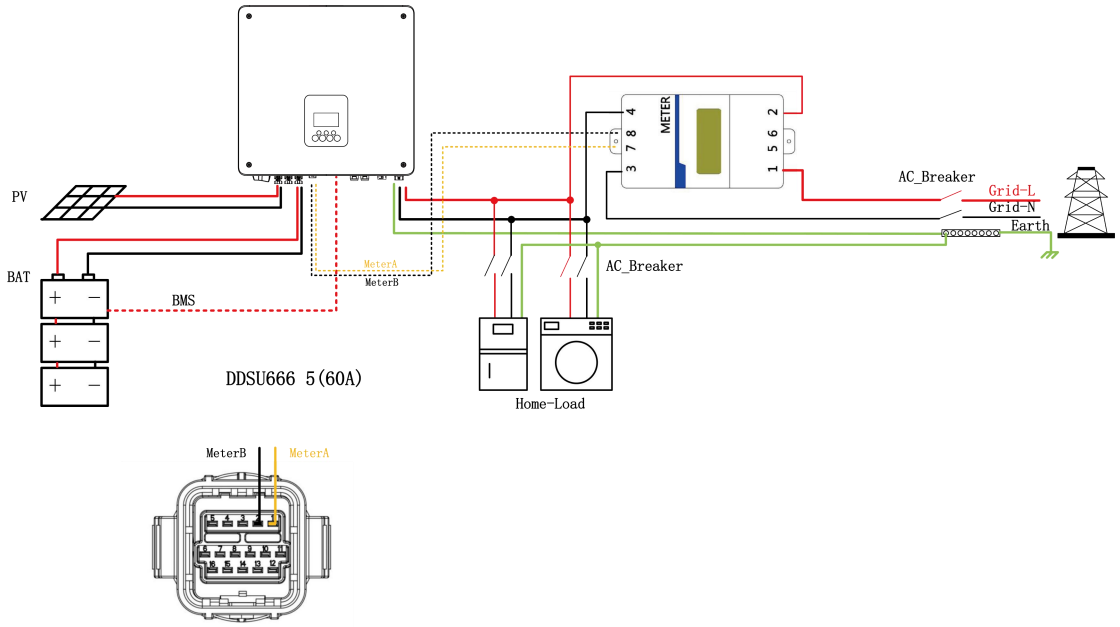
PV
BAT
BMS
DDSU666 5(60A)
METER
AC_Breaker
Grid-L
Grid-N
Earth
AC_Breaker
Home-Load
MeterA
MeterB

MeterB
MeterA

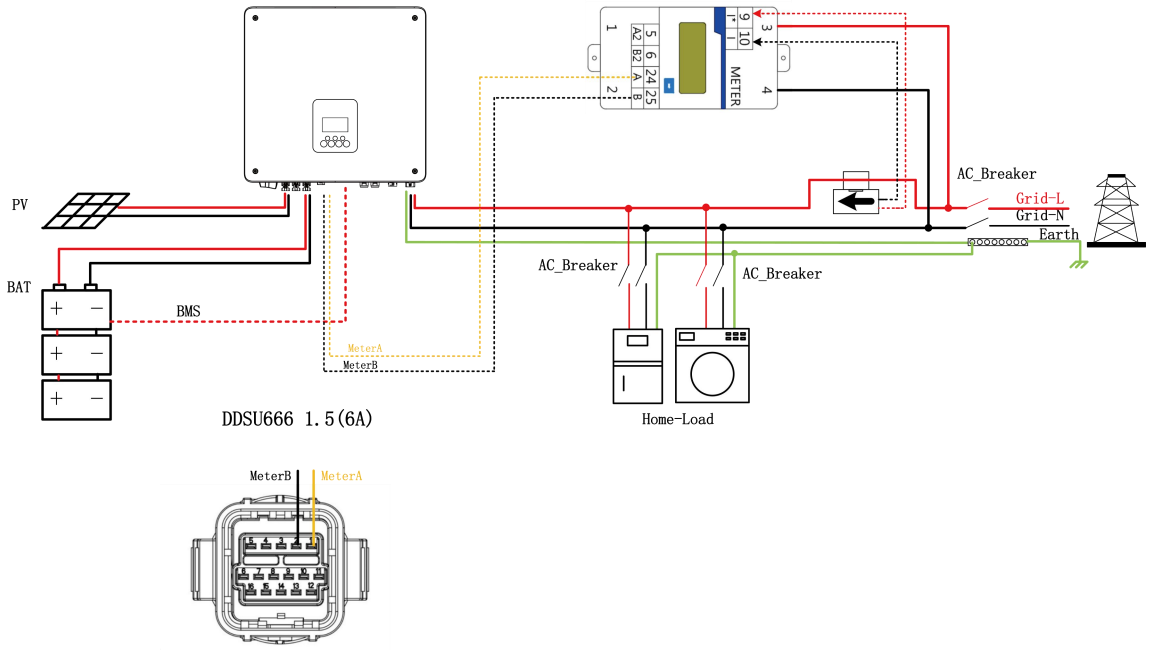

Note:

- H1-G2 standard with CT, you can refer to the CT wiring as shown in the figure wiring.
- Meter type: DDSU666 5(60A) / DDSU666 5(80A) (Optional)
- Meter is optional, respectively, DDSU666 5 (60A) and DDSU666 5 (80A), there are some differences between the two wiring, please refer to the wiring as shown in the diagram.
- **Detailed wiring for different conditions can be found in the user manual.**
- **CT and Meter only need to be connected to one when used.**
- Please be noted that the load/inverter connections and grid connections are illustrated in the figure below. Port 10 is specifically for neutral connection.
- This inverter has an integrated export management function. To enable this function, a power meter or CT must be installed. The CT should be clamped on the main live line of the grid side. The arrow on the CT should be pointing towards the grid. The red cable connects to CT1+, and the black cable connects to CT1-.
- For Meter installation, please install it on the grid side. The Meter cable connects to Meter485A/Meter485B.

Soft Limit:

After setting the Export Limit value, the inverter export power is limited to below the set value within 15s.

Hard Limit:

After setting the Export Limit value, the inverter will detect the export power in real time according to the CT or meter, and trigger the inverter to disconnect from the grid and shut down if the soft limit time requirement is not met; if the CT or meter communication is lost, the inverter will also trigger the disconnection and shut down.

- **CT/ Meter Self-Test Function Setting Instructions**

1. Setting Guidelines

Menu→Settings→Feature→Meter/CT→Set

- CT
- Meter_1P
- Meter_3P →Check
- Disable

Note: The self-test function for CT/electric meter can be set on the screen, and remote access has not yet been developed. The self-test function can only be applied when both the battery and the grid are connected, and the test will be conducted after grid connection.

2. Legend Explanation

First, select the corresponding CT or meter, and then follow the steps below to perform the self-test.

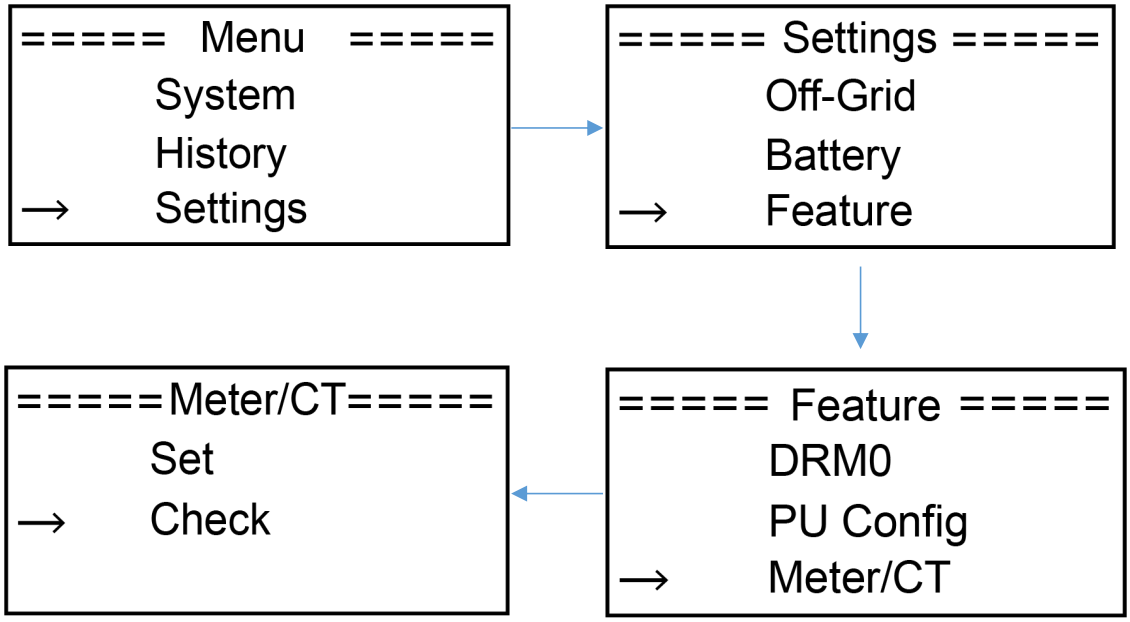

Result:

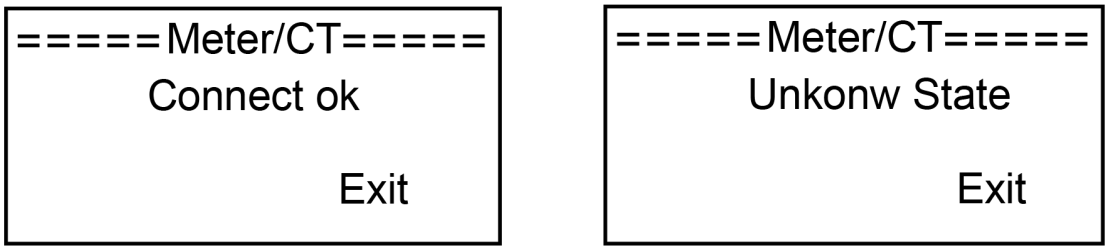

3. ‘Unknown state’ explanation:

‘Unknown State’, this error will be reported in the following states:

(a) The error occurs when the system is not connected to the battery, or if the connection is incorrect.

(b) The error occurs when performing the self-test directly without selecting whether the connection is for the CT or the Meter

(c) The error occurs when the connection and selection do not match (e.g., the system is connected to a CT, but the selected option is for an Meter)

Note: If the CT is connected in reverse, ‘Connect Err’ will be reported instead of ‘Unknown State’.

```
=====Meter/CT=====
      Connect Err

                Exit
```

- **BMS**

Communication interface between inverter and battery is RS485 or CAN with a Rj45 connector.

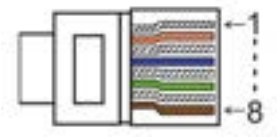

PIN	1	2	3	4	5	6	7	8
Definition	BAT AWAKEN	GND_COM	/	BMS_CANL	BMS_CANH	BMS_CANH	BMS_CANL	/

BMS and LAN Connection :

Step 1: Insert the network cable into the wire-locking nut, sealing plug and main body in turn. The sealing plug is stuck into the network cable through the gap on the sealing side.

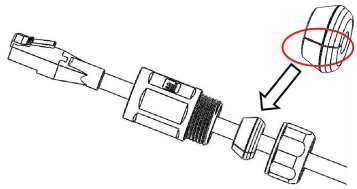

Step 2: Insert the network cable plug into the matched RJ45 panel mount connector.

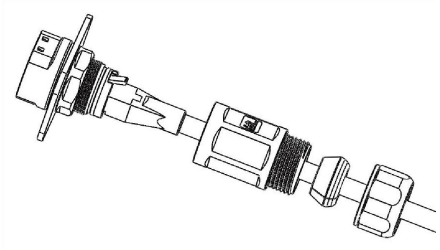

Step 3: Tighten the connector mainbody by an open-ended wrench into the RJ45 panel mount connector with a torque 1.2±0.2 N·m.

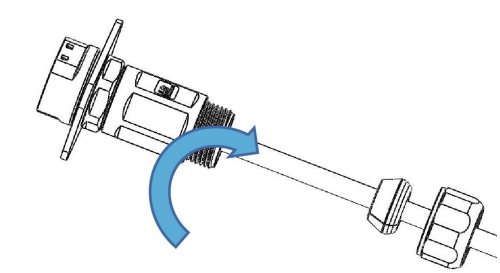

Step 4: Insert the sealing plug into the main body of RJ45 cable end connector.

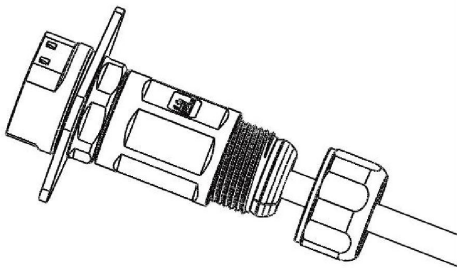

Step 5: Tighten the connector's nut by an open-ended wrench with a torque 1.2±0.2 N·m.

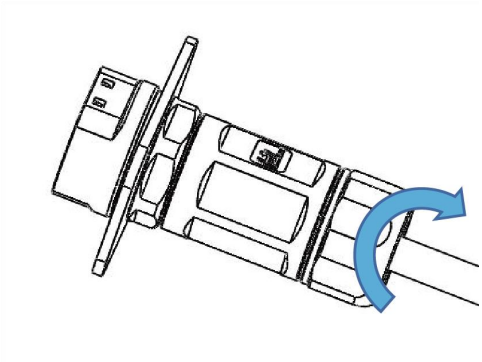

- **DRM**

DRM0 setting

Settings → Feature Parm → DRM0 → Enable/Disable

DRM is provided to support several demand response modes by emitting control signals as below.

Mode	Requirement
DRM0	Operate the disconnection device.
DRM1	Do not consume power.
DRM2	Do not consume at more than 50% of rated power.
DRM3	Do not consume at more than 75% of rated power and source reactive power if capable.
DRM4	Increase power consumption (subject to constraints from other active DRMs).
DRM5	Do not generate power.
DRM6	Do not generate at more than 50% of rated power.
DRM7	Do not generate at more than 75% of rated power and sink reactive power if capable.
DRM8	Increase power generation (subject to constraints from other active DRMs).

Note: Currently only supports DRM0 function, other functions are under development.

DRM PIN Definition

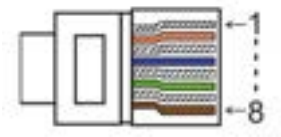

PIN	1	2	3	4	5	6	7	8
Definition	GND_COM	SHUTDOWN	OUT_DRM0	3.3V_COM	OUT_DRM4/8	OUT_DRM3/7	OUT_DRM2/6	OUT_DRM1/5

Model	Socket asserted by shorting pins		Function
ESTOP	1	2	Emergency stop the inverter.

Model	Socket asserted by shorting pins		Function
DRM0	3	4	Operate the disconnection device.

Connection steps:

Step 1: Screw this plate off from inverter.

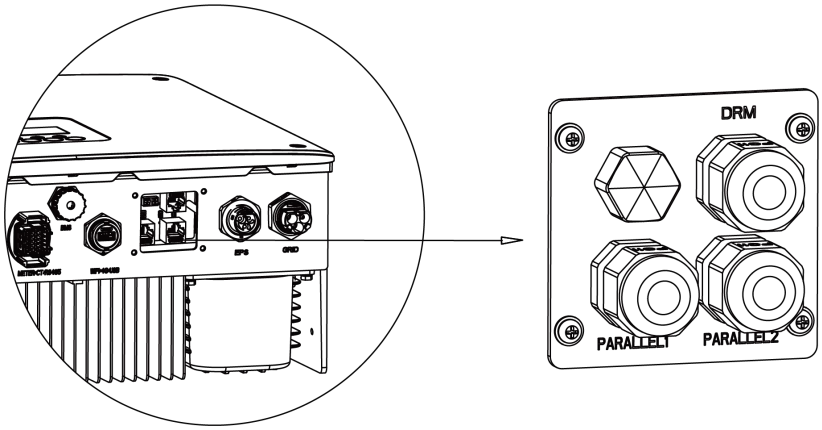

Step 2: Prepare a standard network cable and RJ45 plug, then insert the network cable through the cable connector.

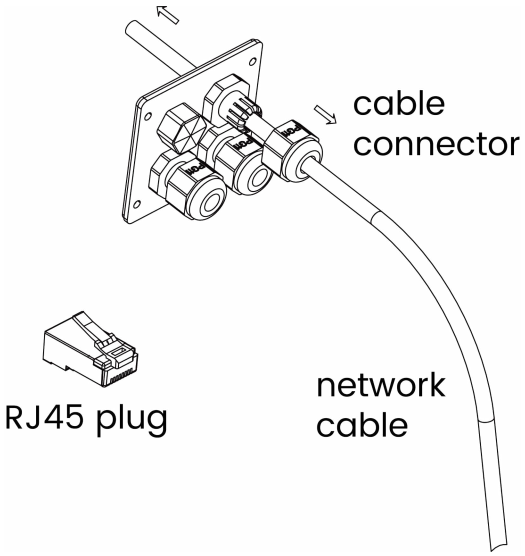

Step 3: Crimp the cable with the RJ45 plug using a crimping tool.

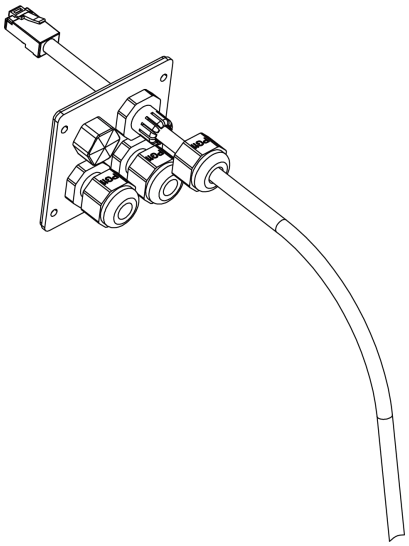

Step 4: Insert the cable connector into DRM port at the bottom of the inverter and screw it tightly.

Steps to Enable DRM:

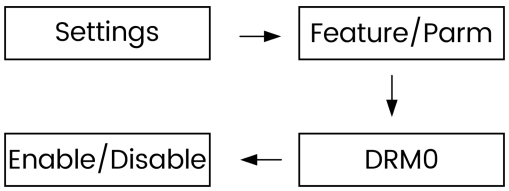

Note:

- Isolation Fault

This inverter complies with IEC 62109-2 clause 13.9 for earth fault alarm monitoring. If an Earth Fault Alarm occurs, the fault code Isolation fault will be displayed on the inverter screen and the RED LED indicator will light up.

- **On-Grid Parallel Connection/Off-Grid Parallel Connection**

H1-G2 series Inverter provides the parallel connection function which should make five inverters maximumly connected in one system when the grid is on. In this system, H1-G2 series energy storage machines support the most parallel applications to achieve the purpose of capacity expansion. The following is an example of the wiring method of three parallel machines, using RJ45 network cable to connect the Parallel port of three machines hand in hand by setting the Parallel parameter. Number represents the number of parallel machines, for example, three machines in parallel can be written "3". Address represents the CAN address of each machine, any three non-repeating values between 1 and 249 can be set. When in the off-grid EPS state, there is no distinction between the main and slave inverters, it's all the main inverter sagging; when in the grid-connected state, it's the ‘Master inverter’ that's connected to the CT/Meter, and the others are the slave inverters.

Note: If multiple parallel machines are far apart and the network cable between Parallel port is too long, you can put the terminal resistor in by dialing in the code and just set the first and last two devices to dial in.

Parallel 1/2 are the ports used in parallel. The system diagram is as follows:

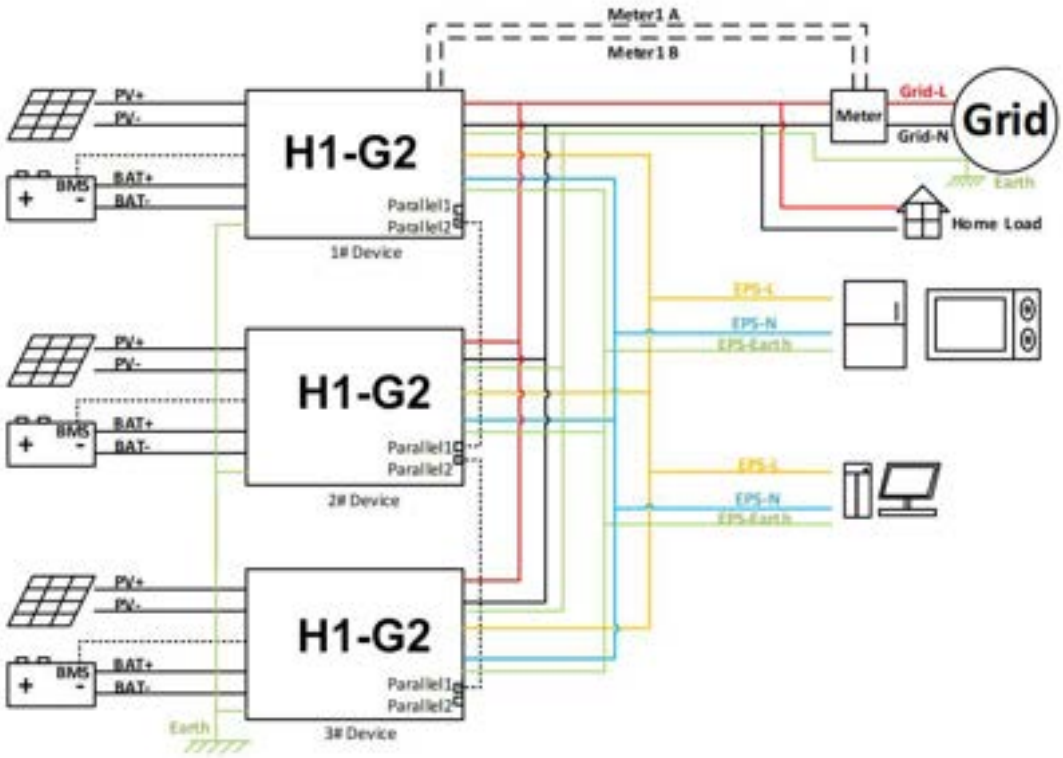

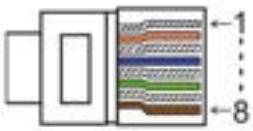

PIN	1	2	3	4	5	6	7	8
Parallel 1	GND_COM	Parallel_CANL	Parallel_CANH	CANL	CANH	+3.3V_COM	Parallel_485B	Parallel_485A
Parallel 2	GND_COM	Parallel_CANL	Parallel_CANH	CANL	CANH	+3.3V_COM	Parallel_485B	Parallel_485A

Note: Please confirm the software version, some software does not support the parallel function, you can contact our service department.

■ Wiring Operation and LCD Setting

Note: Please use the inverter that has the same firmware version for parallel connection to avoid compatible issue.

Step1: Connect all inverters' communication together by connecting network cables between CAN ports.

- Use standard CAT 7 network cables for CAN-CAN connection and CAT 5 cable for CAN-Meter connection.
- Insert one side of CAT 7 cable into the first inverter's CAN port and the other side into the next inverter's CAN port.
- Insert one side of CAT 5 cable into the Meter port of meter, and the other side into the CAN 1 port the first inverter or the CAN 2 port of the last inverter.

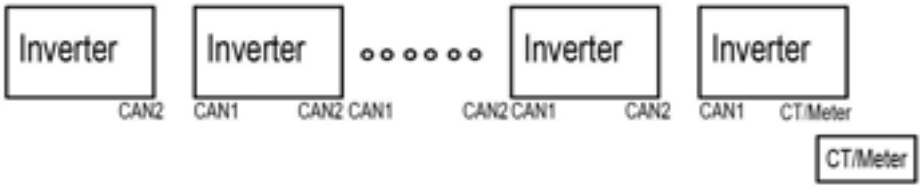

Step2: Set the DIP switch (No need to set all inverter's DIP switch).

- Find the inverter with meter cable plugged.
- Push the white DIP switch to "ON" position (from down to up) by a suitable tweezers.

Parallel machines at both ends of the head need to be dialed into the termination resistor.

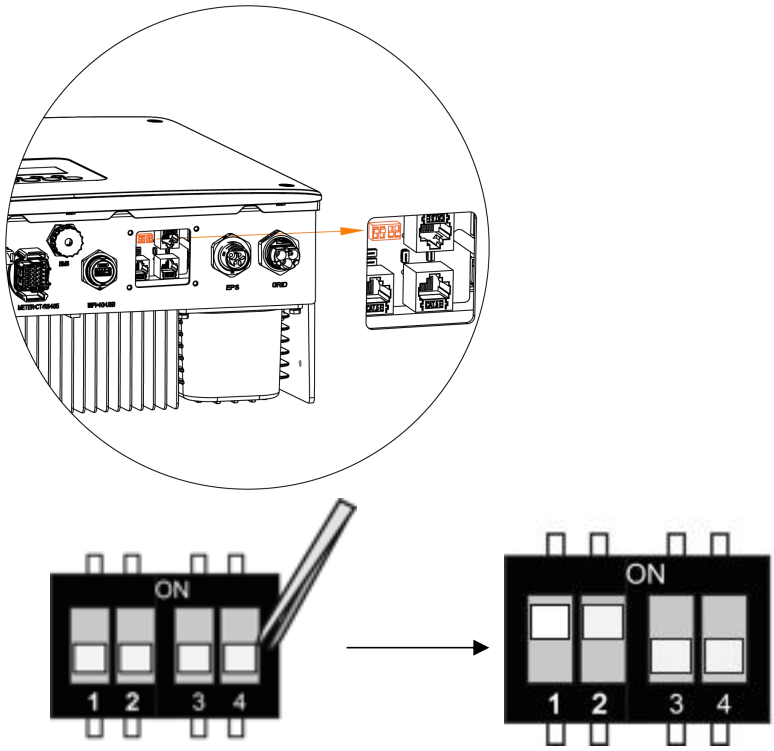

Step3: Find the inverter connected with the meter, then enter setting page of the inverter LCD display, then click parallel. Set Address first and then set Number. The range of Address is 1-249 and the range of Number is 2-8. address sets the id of the parallel machine, with a different value for each machine. Number sets the number of parallel machines, with the same value for each machine.

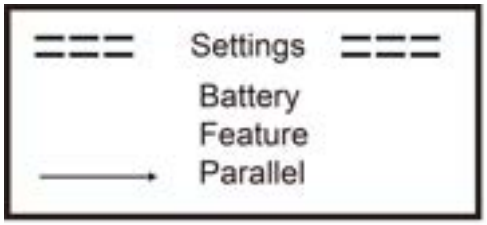

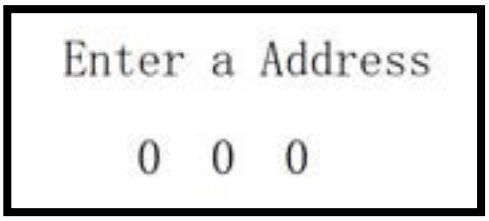

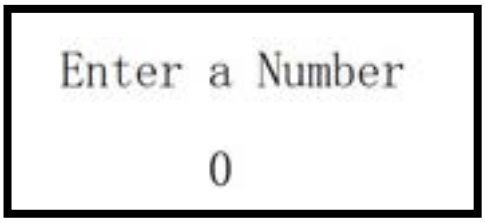

■ How to exit from parallel system

If one inverter wants to exit from this parallel system, please follow the steps below:

if address is set to 250, the parallel mode is exited and the stand-alone mode is entered.

6.6 EPS Connection

A. EPS Wiring

EPS mode can be achieved by two different type of wiring methods. One is using the internal bypass to wire the house emergency loads on the EPS port from inverter. Another is using external contactor to wire the EPS loads on the contactor self (External contactor need to be purchased separately).

Note: the inverter default is set as "External" EPS wiring mode, it can be set to "Internal" via display setting "Menu – Setting – Feature – Bypass Relay".

- **Use Internal EPS Wiring:**

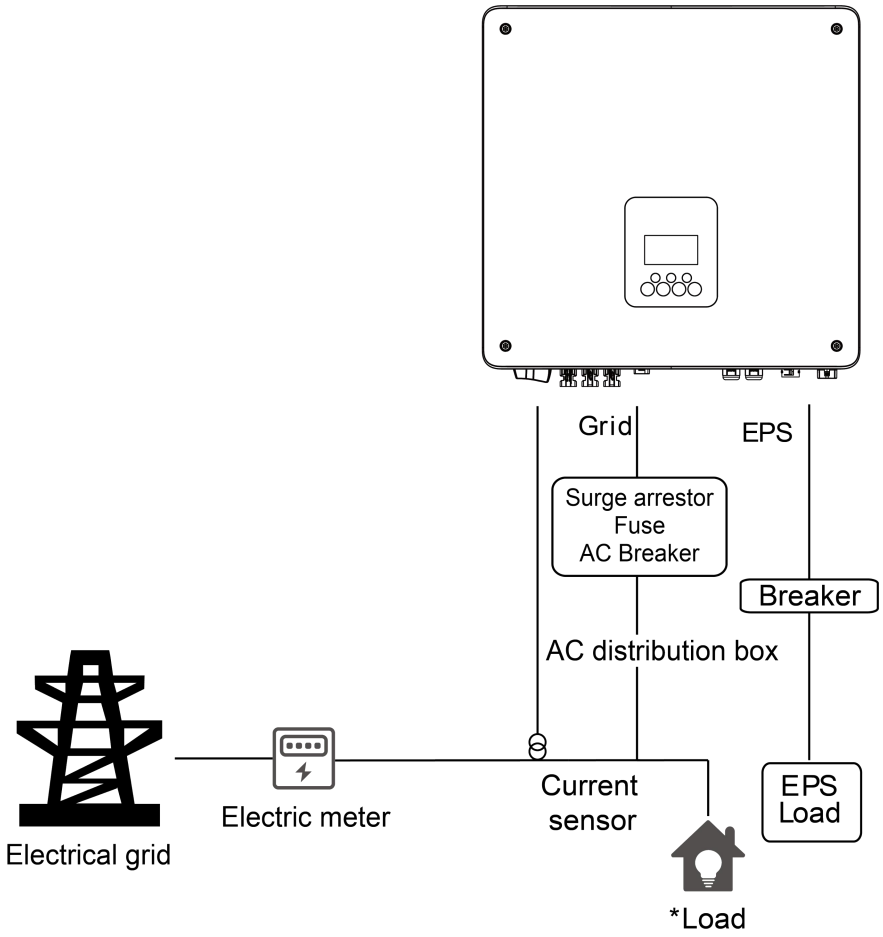

Notes:

1.Under On-grid mode, please ensure that the EPS loads power is lower than the inverter's maximum Bypass power.

2.Under Off-grid mode, ensure that the EPS loads power is lower than the inverter's maximum EPS power.

3. We suggest not connect the inductive loads on EPS port.

B. Primary and secondary load switching wiring diagram

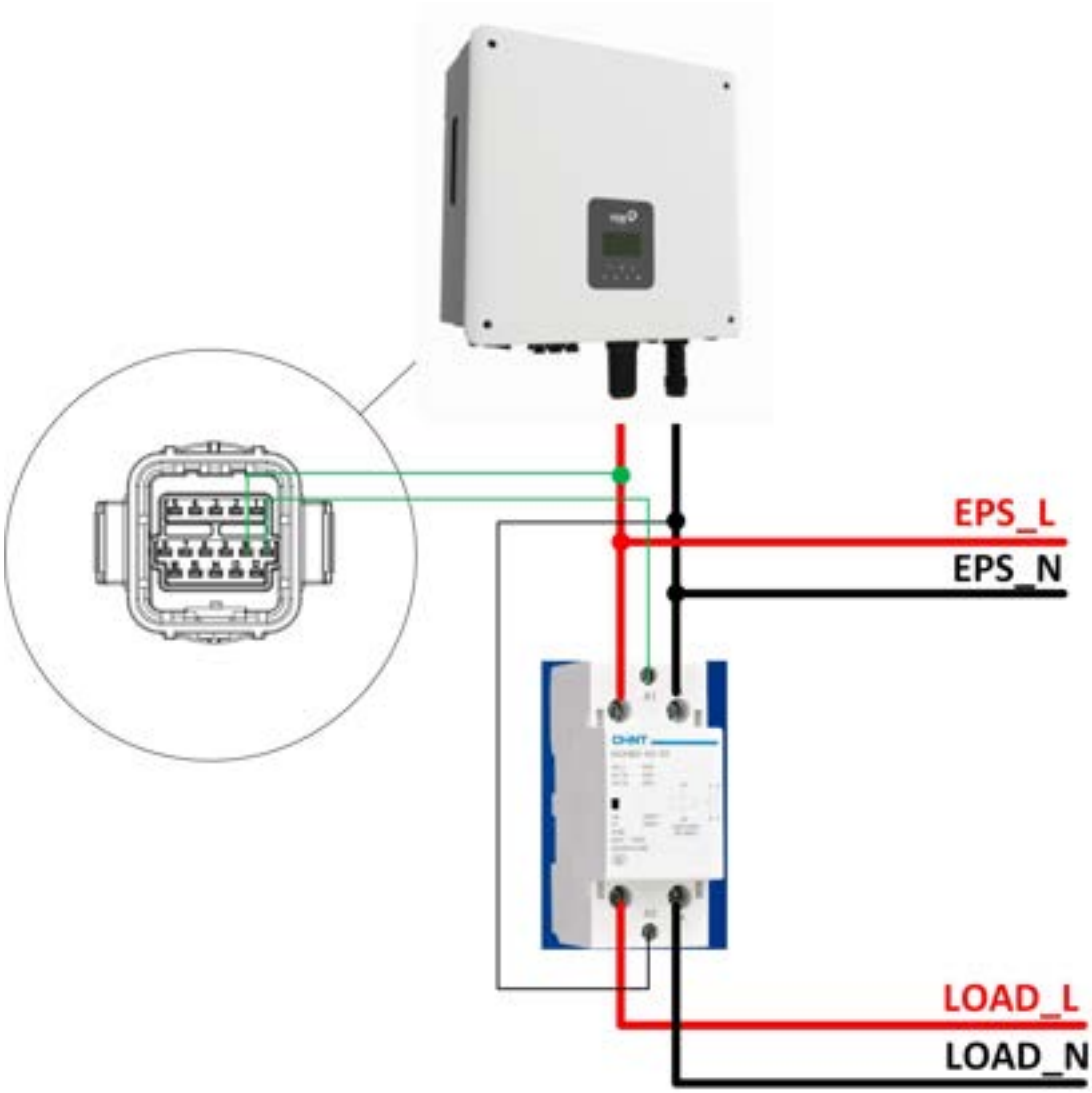

C. Common loads description

Under EPS mode, if need to connect the inductive load on EPS port, please ensure that the instantaneous power of the load at startup is lower than the maximum power of the EPS mode. Below table shows some conventional and reasonable loads for you reference. Please refer to your loads' manual for the actual specs.

Type	Power		Common equipment	Example		
	Start	Rated		Equipment	Start	Rated
Resistive load	X 1	X 1	Incandescent lamp, TV	100W Incandescent lamp	100VA (W)	100VA (W)
Capacitive load	X 2	X 1.5	Fluorescent lamp	40W Fluorescent lamp	80VA (W)	60VA (W)
Inductive load	X 3~5	X 2	Fan, Fridge	150W Fridge	450-750VA (W)	300VA (W)

6.7 System Connection Diagrams

Neutral line of alternative supply must not be isolated or switched.
For countries such as Australia, New Zealand, South Africa, etc., please follow local wiring regulations!

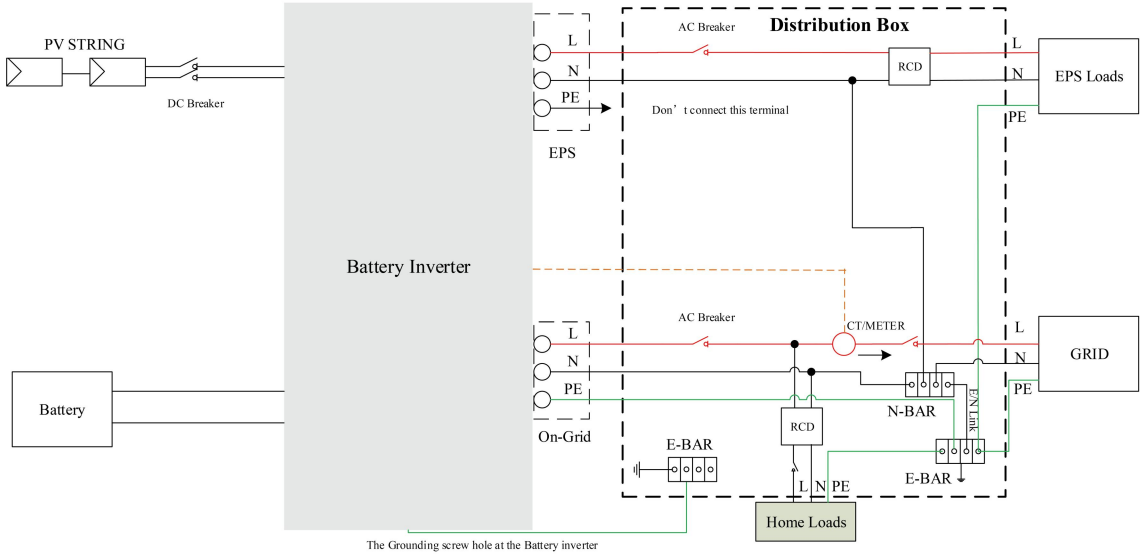

This is intellectual property of FOXESS CO., LTD

Neutral line of alternative supply must be disconnected after the grid is off.
For countries such as China, Germany, the Czech Republic, Italy, etc., please follow local wiring regulations!

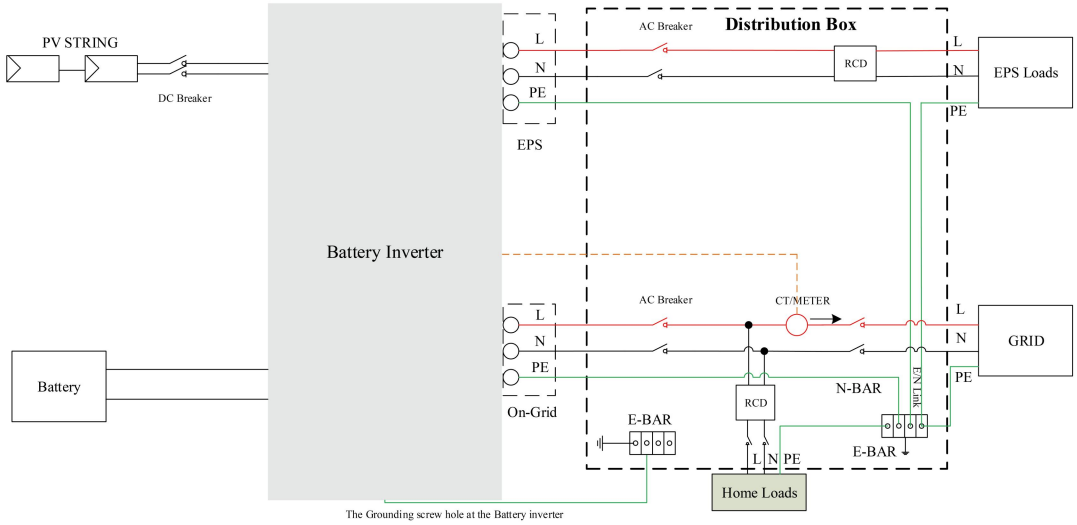

This is intellectual property of FOXESS CO., LTD

6.8 Inverter Start-Up

Please refer to the following steps to start up the inverter.

1. Ensure the inverter fixed well on the wall.
2. Make sure all the DC wirings and AC wirings are completed.
3. Make sure the CT/meter is connected well.
4. Make sure the battery is connected well.
5. Make sure the external EPS contactor is connected well (if needed).
6. Turn on the PV/DC switch (for hybrid only), AC breaker, EPS breaker and battery breaker.
7. Enter the settings page, default password is ‘0000’, select START / STOP and set it to start.

Note:

- When starting the inverter for the first time, the country code will be set by default to the local settings. Please check if the country code is correct.
- Set the time on the inverter using the button or by using the APP.
- The internal bypass relay is closed by default, if it needs to be opened, enter the setting page, select "Internal".
- EPS function is off by default, if it needs to be opened, enter the setting page, select EPS "ON/OFF", default eps voltage/frequency is 230V and 50Hz.

6.9 Inverter Switch Off

Please refer to the following steps to switch off the inverter.

1. Enter the settings page, select START / STOP and set it to stop.
2. Turn off the PV/DC switch (for hybrid only), AC breaker, EPS breaker and battery breaker.
3. Wait 5 min before you open the upper lid (if in need of repair).

7. Firmware Upgrading

User can upgrade inverter's firmware via a U-disk.

- Preparation

Please ensure the inverter is steadily powered on.

Inverter must keep the battery on through whole procedure of upgrading. Please prepare a PC and make sure the size of U-disk is under 32G, and the format is fat 16 or fat 32.

⚠	**Caution!** Please DO NOT apply USB3.0 U-disk on inverter USB port, the inverter USB port only support for USB2.0 U-disk.

- Upgrading steps:

Step 1: Please contact our service support to get the update files, and extract it into your U-disk as follow:

update/master/ H1_master_vx.xx.bin

update/slave/ H1_slave_vx.xx.bin

update/manager/ H1_manager_vx.xx.bin

Note: vx.xx is version number.

Warning: Make sure the directory is in accordance with above form strictly! Do not modify the program file name, or it may cause the inverter not work anymore!

Step 2: Unscrew the waterproof lid and insert U-disk into the "USB" port at the bottom of the inverter.

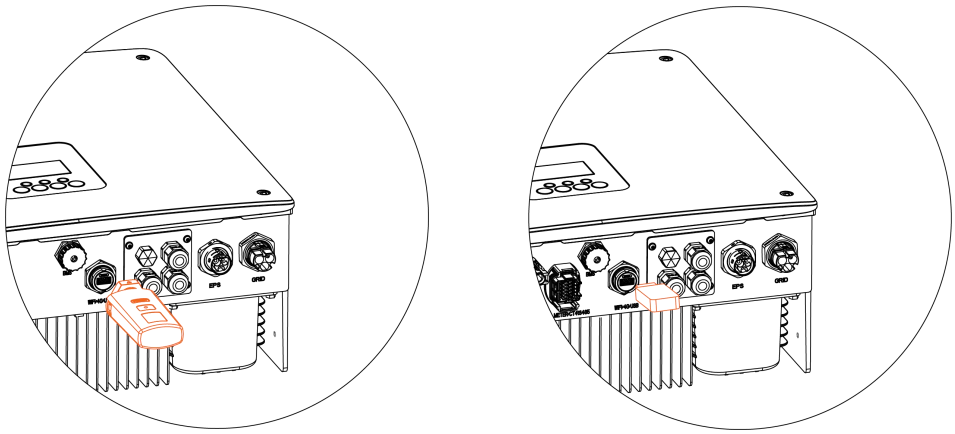

Step 3: The LCD will show the selection menu. Then press up and down to select the one that you want to upgrade and press "OK" to confirm to upgrade.

Step 4: After the upgrade is finished, pull out the U-disk. Screw the waterproof lid.

8. Operation

8.1 Control Panel

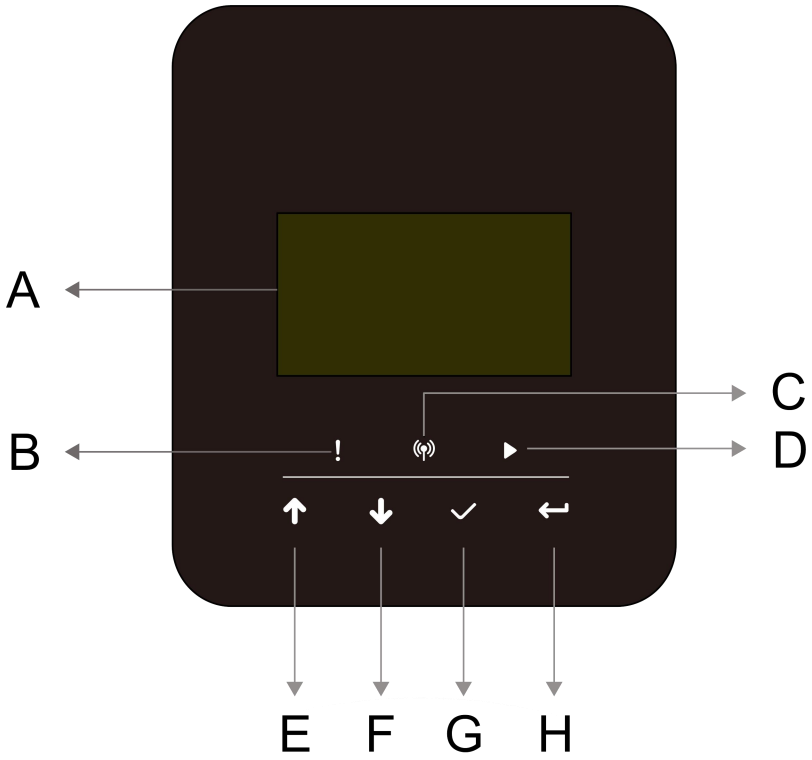

Object	Name	Function
A	LCD screen	Display the information of the inverter.
B	Indicator LED	Red: The inverter is in fault mode.
C		Blue: The inverter is normally connected to the battery.
D		Green: The inverter is in normal state.
E	Function button	Up button: Move cursor to upside or increase value.
F		Down button: Move cursor to downside or decrease value.
G		OK button: Confirm the selection.
H		Return button: Return the previous operation.

8.2 Function Tree

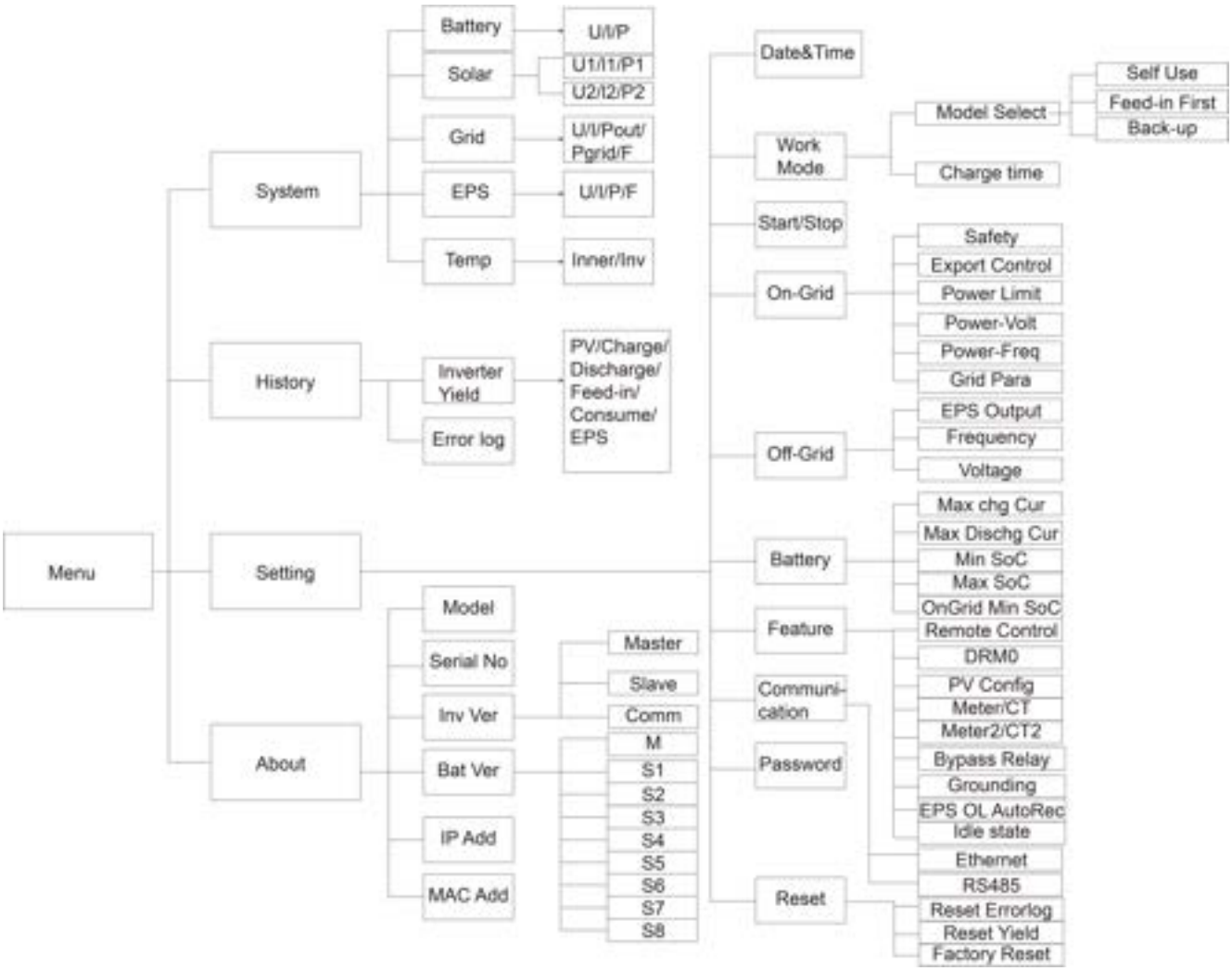

9. Maintenance

This section contains information and procedures for solving possible problems with the Fox ESS inverters and provides you with troubleshooting tips to identify and solve most problems that can occur.

9.1 Alarm List

Fault Code	Solution
Grid Lost Fault	Grid is lost. • System will reconnect if the utility is back to normal. • Or seek help from us, if not go back to normal state.
Grid Volt Fault	Grid voltage out of range. • System will reconnect if the utility is back to normal. • Or seek help from us, if not go back to normal state.

Grid Freq Fault	Grid frequency out of range. • System will reconnect if the utility is back to normal. • Or seek help from us, if not go back to normal state.
10min Volt Fault	The grid voltage is out of range for the last 10 Minutes. • System will reconnect if the utility is back to normal. • Or seek help from us, if not go back to normal state.
SW Inv Cur Fault	Output current high detected by software. • Disconnect PV, grid and battery, then reconnect. • Or seek help from us, if not go back to normal state.
DCI Fault	DC component is out of limit in output current. • Disconnect PV, grid and battery, then reconnect. • Or seek help from us, if not go back to normal state.
HW Inv Cur Fault	Output current high detected by hardware. • Disconnect PV, grid and battery, then reconnect. • Or seek help from us, if not go back to normal state.
SW Bus Vol Fault	Bus voltage out of range detected by software. • Disconnect PV, grid and battery, then reconnect. • Or seek help from us, if not go back to normal state.
Bat Volt Fault	Battery voltage fault. • Check if the battery input voltage is within the normal range. • Or seek help from us.
SW Bat Cur Fault	Battery current high detected by software. • Disconnect PV, grid and battery, then reconnect. • Or seek help from us, if not go back to normal state.
Iso Fault	The isolation is failed. • Please check if the insulation of electric wires is damaged. • Wait for a while to check if back to normal. • Or seek for help from us.
Res Cur Fault	The residual current is high. • Please check if the insulation of electric wires is damaged. • Wait for a while to check if back to normal. • Or seek for help from us.
Pv Volt Fault	PV voltage out of range. • Please check the output voltage of PV panels. • Or seek for help from us.
SW Pv Cur Fault	PV input current high detected by software. • Disconnect PV, grid and battery, then reconnect. • Or seek help from us, if not go back to normal state.

Temp Fault	The inverter temperature is high. • Please check if the environment temperature. • Wait for a while to check if back to normal. • Or seek for help from us.
Ground Fault	The ground connection is failed. • Check the voltage of neutral and PE. • Check AC wiring. • Disconnect PV, grid and battery, then reconnect. • Or seek help from us, if not go back to normal state.
Over Load Fault	Over load in on grid mode. • Please check if the load power exceeds the limit. • Or seek for help from us.
Eps Over Load	Over load in off grid mode. • Please check if the eps load power exceeds the limit. • Or seek for help from us.
Bat Power Low	The battery power is low. • Wait the battery to be recharged. • Or seek for help from us.
HW Bus Vol Fault	Bus voltage out of range detected by hardware. • Disconnect PV, grid and battery, then reconnect. • Or seek help from us, if not go back to normal state.
HW Pv Cur Fault	PV input current high detected by hardware. • Disconnect PV, grid and battery, then reconnect. • Or seek help from us, if not go back to normal state.
HW Bat Cur Fault	Battery current high detected by hardware. • Disconnect PV, grid and battery, then reconnect. • Or seek help from us, if not go back to normal state.
SCI Fault	The communication between master and manager is fail. • Disconnect PV, grid and battery, then reconnect. • Or seek help from us, if not go back to normal state.
MDSP SPI Fault	The communication between master and slave is fail. • Disconnect PV, grid and battery, then reconnect. • Or seek help from us, if not go back to normal state.
MDSP Smpl Fault	The master sample detection circuit is failed. • Disconnect PV, grid and battery, then reconnect. • Or seek help from us, if not go back to normal state.

Res Cur HW Fault	Residual current detection device is failed. • Disconnect PV, grid and battery, then reconnect. • Or seek help from us, if not go back to normal state.
Inv EEPROM Fault	The inverter eeprom is fault. • Disconnect PV, grid and battery, then reconnect. • Or seek help from us, if not go back to normal state.
PvCon Dir Fault	The PV connection is reversed. • Check if the positive pole and negative pole of PV are correctly connected. • Or seek help from us.
Bat Relay Open	The battery relay keeps open. • Disconnect PV, grid and battery, then reconnect. • Or seek help from us, if not go back to normal state.
Bat Relay Short Circuit	The battery relay keeps close. • Disconnect PV, grid and battery, then reconnect. • Or seek help from us, if not go back to normal state.
Bat Buck Fault	The battery buck circuit mosfet is fail. • Disconnect PV, grid and battery, then reconnect. • Or seek help from us, if not go back to normal state.
Bat Boost Fault	The battery boost circuit mosfet is fail. • Disconnect PV, grid and battery, then reconnect. • Or seek help from us, if not go back to normal state.
Eps Relay Fault	The eps relay is failed. • Disconnect PV, grid and battery, then reconnect. • Or seek help from us, if not go back to normal state.
BatCon Dir Fault	The battery connection is reversed. • Check if the positive pole and negative pole of battery are correctly connected. • Or seek help from us.
Main Relay Open	The grid relay keeps open. • Disconnect PV, grid and battery, then reconnect. • Or seek help from us, if not go back to normal state.
S1 Close Fault	The grid relay S1 keep close. • Disconnect PV, grid and battery, then reconnect. • Or seek help from us, if not go back to normal state.
S2 Close Fault	The grid relay S2 keep close. • Disconnect PV, grid and battery, then reconnect. • Or seek help from us, if not go back to normal state.

M1 Close Fault	The grid relay M1 keep close. • Disconnect PV, grid and battery, then reconnect. • Or seek help from us, if not go back to normal state.
M2 Close Fault	The grid relay M2 keep close. • Disconnect PV, grid and battery, then reconnect. • Or seek help from us, if not go back to normal state.
GridV Cons Fault	The grid voltage sample value between master and slave is not consistent. • Disconnect PV, grid and battery, then reconnect. • Or seek help from us, if not go back to normal state.
GridF Cons Fault	The grid frequency sample value between master and slave is not consistent. • Disconnect PV, grid and battery, then reconnect. • Or seek help from us, if not go back to normal state.
Dci Cons Fault	The dci sample value between master and slave is not consistent. • Disconnect PV, grid and battery, then reconnect. • Or seek help from us, if not go back to normal state.
Rc Cons Fault	The residual current sample value between master and slave is not consistent. • Disconnect PV, grid and battery, then reconnect. • Or seek help from us, if not go back to normal state.
RDSP SPI Fault	The communication between master and slave is fail. • Disconnect PV, grid and battery, then reconnect. • Or seek help from us, if not go back to normal state.
RDSP Smpl Fault	The slave sample detection circuit is failed. • Disconnect PV, grid and battery, then reconnect. • Or seek help from us, if not go back to normal state.
ARM EEPROM Fault	The manager eeprom is fault. • Disconnect PV, grid and battery, then reconnect. • Or seek help from us, if not go back to normal state.
Meter Lost Fault	The communication between meter and Inverter is interrupted. • Check if the communication cable between meter and Inverter is correctly and well connected.
BMS Lost	The communication between BMS and Inverter is interrupted. • Check if the communication cable between BMS and Inverter is correctly and well connected.
Bms Ext Fault	The communication between BMS and Inverter is interrupted. • Check if the communication cable between BMS and Inverter is correctly and well connected.
Bms Int Fault	DIP switch at the wrong position; The communication between battery packs is interrupted. • Move the DIP switch to the correct position; • Check if the communication cable between battery packs is correctly and well connected.

Bms Volt High	Battery over voltage. • Please contact battery supplier.
Bms Volt Low	Battery under voltage. • Please contact battery supplier.
Bms ChgCur High	Battery charge over current. • Please contact battery supplier.
Bms DchgCur High	Battery discharge over current. • Please contact battery supplier.
Bms Temp High	Battery over temperature. • Please contact battery supplier.
Bms Temp Low	Battery under temperature. • Please contact battery supplier.
BmsCellImbalance	The capacities of cells are different. • Please contact battery supplier.
Bms HW Protect	Battery hardware under protection. • Please contact battery supplier.
BmsCircuit Fault	Bms hardware circuit fault. • Please contact battery supplier.
Bms Insul Fault	Battery insulation fault. • Please contact battery supplier.
BmsVoltsSen Fault	Battery voltage sensor fault. • Please contact battery supplier.
BmsTempSen Fault	Battery temperature sensor fault. • Please contact battery supplier.
BmsCurSen Fault	Battery current sensor fault. • Please contact battery supplier.
Bms Relay Fault	Battery relay fault. • Please contact battery supplier.
Bms Type Unmatch	The capacity of battery packs is different. • Please contact battery supplier.
Bms Ver Unmatch	The software between slaves are different. • Please contact battery supplier.

Bms Mfg Unmatch	The cell manufacture is different. • Please contact battery supplier.
Bms SwHw Unmatch	The slave software and hardware are not match. • Please contact battery supplier.
Bms M&S Unmatch	The software between Master and Slave are not match. • Please contact battery supplier.
Bms ChgReq NoAck	No action for charging request. • Please contact battery supplier.

9.2 Troubleshooting and Routine Maintenance

- Troubleshooting

a. Please check the fault message on the System Control Panel or the fault code on the inverter information panel. If a message is displayed, record it before doing anything further.

b. Attempt the solution indicated in table above.

c. If your inverter information panel is not displaying a fault light, check the following to make sure that the current state of the installation allows for proper operation of the unit:

(1) Is the inverter located in a clean, dry, adequately ventilated place?

(2) Have the DC input breakers opened?

(3) Are the cables adequately sized?

(4) Are the input and output connections and wiring in good condition?

(5) Are the configurations settings correct for your particular installation?

(6) Are the display panel and the communications cable properly connected and undamaged?

Contact Fox ESS Customer Service for further assistance. Please be prepared to describe details of your system installation and provide the model and serial number of the unit.

- Safety check

A safety check should be performed at least every 12 months by a qualified technician who has adequate training, knowledge and practical experience to perform these tests. The data should be recorded in an equipment log. If the device is not functioning properly or fails any of the tests, the device has to be repaired. For safety check details, refer to section 2 of this manual.

- Maintenance checking list

During the process of using the inverter, the responsible person shall examine and maintain the machine regularly. The required actions are as follows.

- Check that if the cooling fins at the rear of the inverters are collecting dust/dirt, and the machine should be cleaned when necessary. This work should be conducted periodically.
- Check that if the indicators of the inverter are in normal state, check if the display of the inverter is normal. These checks should be performed at least every 6 months.
- Check if the input and output wires are damaged or aged. This check should be performed at least every 6 months.
- Get the inverter panels cleaned and their security checked at least every 6 months.

Note: Only qualified individuals may perform the following works.

10. Decommissioning

10.1 Dismantling the Inverter

- Disconnect the inverter from DC Input and AC output. Wait for 5 minutes for the inverter to fully de-energize.
- Disconnect communication and optional connection wirings. Remove the inverter from the bracket.
- Remove the bracket if necessary.

10.2 Packaging

If possible, please pack the inverter with the original packaging. If it is no longer available, you can also use an equivalent box that meets the following requirements.

- Suitable for loads more than 30 kg.
- Contains a handle.
- Can be fully closed.

10.3 Storage and Transportation

Store the inverter in dry place where ambient temperatures are always between -40°C - + 70°C.Take care of the inverter during the storage and transportation; keep less than 4 cartons in one stack. When the inverter or other related components need to be disposed of, please ensure it is carried out according to local waste handling regulations. Please be sure to deliver any inverter that needs to be disposed from sites that are appropriate for the disposal in accordance with local regulations.

The copyright of this manual belongs to FOXESS CO., LTD. Any corporation or individual should not plagiarize, partially or fully copy (including software, etc.), and no reproduction or distribution of it in any form or by any means is permitted. All rights reserved.

FOXESS CO., LTD.

Add: No.939, Jinhai Third Road, New Airport Industry Area, Longwan District, Wenzhou, Zhejiang, China

Tel: 0510- 68092998

Web: WWW.FOX-ESS.COM

V1.0.8

10-500-10023-08